Enjoy the difference

cavalon

Pilot Operating Handbook

www.auto-gyro.com

Pilot Operating Handbook for Gyroplane Cavalon

Pilot Operating Handbook for Gyroplane Cavalon

Model: _____

Serial number: _____

Registration: _____

Type certificate number: _____

Aircraft manufacturer and type certificate holder:

AutoGyro GmbH,
Dornierstraße 14
D-31137 Hildesheim
Tel.: +49 (0) 51 21 / 8 80 56-00
Fax: +49 (0) 51 21 / 8 80 56-19

Distribution partner: _____

_____

_____

Owner: _____

_____

_____

This flight manual is always to be carried on board of the aircraft and must be kept in current, up-to-date status. The latest revisions and version status is available at www.auto-gyro.com. Extent and revision status of the manual is recorded in the revision log and the table of content.

This gyroplane may be operated only in strict compliance with the limitations and procedures contained in this manual.

The manual is not a substitute for competent theoretical and practical training on the operation of this aircraft. Failure to adhere to its provisions or to take proper flight instruction can have fatal consequences.

REVISION LOG

Rev.	Inserted by	Date	Signature
1.0	AutoGyro GmbH	01.07.2011	
1.1	AutoGyro GmbH	01.09.2011	
1.2	AutoGyro GmbH	01.01.2012	
1.3	AutoGyro GmbH	01.04.2012	
1.4	AutoGyro GmbH	01.11.2012	
1.5	AutoGyro GmbH	24.06.2013	
2.0	AutoGyro GmbH	16.06.2014	
2.1	AutoGyro GmbH	01.07.2015	
2.2	AutoGyro GmbH	01.06.2016	
3.0	AutoGyro GmbH	17.07.2018	
3.1	AutoGyro GmbH	20.10.2018	

CONTENTS

LIST OF EFFECTIVE PAGES

Page(s)	Rev.	Date
1-1 to 1-8	3.1	20.10.2018
2-1 to 2-19	3.1	20.10.2018
3-1 to 3-14	3.1	20.10.2018
4-1 to 4-18	3.1	20.10.2018
5-1 to 5-8	3.1	20.10.2018
6-1 to 6-1	3.1	20.10.2018
7-1 to 7-24	3.1	20.10.2018
8-1 to 8-11	3.1	20.10.2018
9-1 – 1 to 4	3.1	20.10.2018
9-2 – 1 to 2	3.1	20.10.2018

Page(s)	Rev.	Date
9-3 – 1 to 1	3.1	20.10.2018
9-4 – 1 to 1	3.1	20.10.2018
9-5 - 1 to 2	3.1	20.10.2018
9-6 – 1 to 2	3.1	20.10.2018
9-7 – 1 to 2	3.1	20.10.2018
9-8 – 1 to 1	3.1	20.10.2018
9-9 – 1 to 1	3.1	20.10.2018
9-10 – 1 to 2	3.1	20.10.2018
10-1 to 10-4	3.1	20.10.2018

INTENTIONALLY LEFT BLANK

CONTENTS

INTENTIONALLY LEFT BLANK

SECTION 1 - GENERAL

1.1 Introduction

This manual is designed as an operating guide for pilots, instructors, and owners/operators, providing information for the safe and efficient operation of this gyroplane. It includes material required to be furnished to the pilot by the competent certification authority. This handbook is not designed as a substitute for adequate and competent flight instruction, however.

Pilots of this aircraft must hold a proper license including the class rating ‘gyroplane’, corresponding to the aircraft’s registration. A special endorsement may be required to fly with passengers. It is the pilot’s responsibility to be familiar with this handbook, the special characteristics of this gyroplane, and all other information and legal requirements relevant for the operation in his country. The pilot is responsible to determine the gyroplane is safe for flight, and to operate the aircraft with respect to the procedures and limitations provided in this manual.

It is the owner’s/operator’s responsibility to have this gyroplane registered and insured, according to country-specific regulations. The aircraft owner/operator is also responsible for maintaining the gyroplane in airworthy condition. Maintenance instructions are provided in the Maintenance Manual and in SECTION 8 of this manual. Note that depending on the kind of operation, type of maintenance activity, or component involved, the competent authority may dictate qualified personnel and/or respective facilities.

1.2 Certification

The Cavalon is designed, tested and certified according to the German design specifications for microlight gyroplanes (“Bauvorschriften für Ultraleichte Tragschrauber”, BUT 2001) including its latest amendment published in “Nachrichten für Luftfahrer” NfL II 13/09 issued 12.02.2009, as well as the British Civil Airworthiness Requirements (BCAR) Section T issue 5.

The corresponding certification documents (Geräte-Kennblatt) have been issued by the responsible Germany department DULV (Deutscher Ultraleichtflugverband e.V.), respectively the German national certifying authority.

The noise certificate was granted according to the German requirements for noise protection for microlight gyroplanes (“Lärmschutzverordnung für Ultraleichte Tragschrauber”).

1.3 Performance Data and Operating Procedures

The legal basis for operating a gyroplane is provided by national law and its respective regulations. The instructions and conditions contained have to be considered when operating the gyroplane. In addition the gyroplane must be operated in compliance with the technical specifications and limitations from the national approval (e.g. Type Approval Data Sheet).

All documented performance data and operating procedures have been identified within the certification processes for this gyroplane by means of flight test and analysis.

1.4 Definition of Terms

This manual uses **WARNING**s, **CAUTION**s and **NOTE**s in bold capital letters to indicate especially critical and important instructions. Additionally, the colour of the panel (red, yellow, and grey shading) highlights the significance of the instruction. Definitions for each term are given below.

WARNING

A warning means that the neglect of the appropriate procedure or condition could result in personal injury or loss of life.

CAUTION

A caution means that the neglect of the appropriate procedure or condition could result in damage to or destruction of equipment.

NOTE

A note stresses the attention for a special circumstance, which is essential to emphasize.

1.5 Important Note

Before each flight pilots must make themselves familiar with the appropriate navigational, weather and safety information pertinent to their planned route.

The limitations provided in SECTION 2 of this manual must be respected at all times. Check the manufacturer's web site www.auto-gyro.com regularly for flight manual updates, airworthiness directives, service bulletins, or safety information.

Abrupt manoeuvres or flight in heavy turbulence must be avoided as this could lead to rotor speed variations associated with high stress, possible damage to the aircraft, or uncontrollable attitudes.

1.6 Three-view of the Cavalon

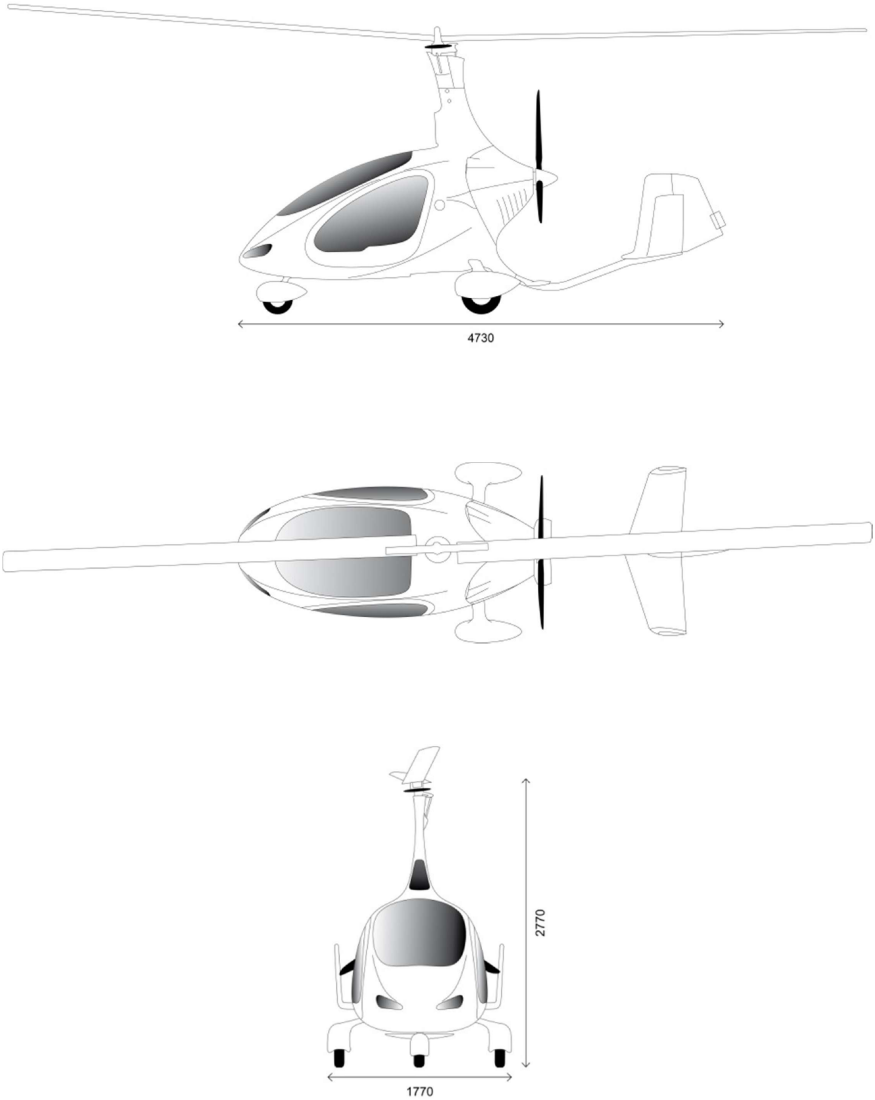

1.7 Description

General Characteristics

- Gyroplane with nose gear wheel chassis
- Aircraft structure is a GRP/CRP monocoque
- Two-seat side-by-side configuration (monocoque design)
- Main landing gear with GRP (glass fibre reinforced plastic) spring spar and hydraulic disc brakes
- Extruded aluminium rotor
- Rotor head controlled with push-pull control cables
- Rudder controlled with cables
- Rudder and stabilizer surfaces made of CRP (carbon fibre)

1.8 Technical Data

Length: .....4.73 m
Width: .....1.77 m
Height: .....2.77 m
Empty weight:..... 290.0 kg (nominal)
(when equipped for night VFR flight) 296.0 kg (nominal)
Payload: ..... 210.0 kg (nominal)
Payload at 560Kg MTOW…….270.0 Kg (nominal)
Take-off weight/mass (max.):..... 450.0 kg / 500.0 kg / 560Kg[1]
Fuel tank capacity: .....100 ltr

1.9 Rotor

General

Type: .....2-bladed, fixed pitch, free to teeter
Material: ..... EN AW 6005A T6 aluminium extrusion
Blade profile: ..... NACA 8H12

Standard Rotor (RSII (red end cap) or RSII TOPP (blue end cap)

NOTE! UK aircraft are fitted with either RSII RAO (red end cap with black blade spacers) or RSII TOPP (blue end cap)

Rotor diameter..... 8.4 m
Rotor disc area .....55.4 sqm
Rotor disc load (at 450.0 kg / 500.0 kg) ..... 8.1 kg/sqm / 9.0 kg/sqm
Rotor disc load (at 560kg MTOW)..... 10.1 kg/sqm

Alternative Rotor

See Supplement 9-9

[1] See Type Approval or Type Certificate Data Sheet. 560Kg MTOW only with the 914UL engine.

1.10 Engine

ROTAX 912 ULS

- 4-cylinder, four-stroke spark-ignition engine with opposed cylinders
- Liquid cooled cylinder heads
- Air cooled cylinders
- Dry sump forced lubrication with separate oil tank
- Automatic valve adjustment by hydraulic tappet
- 2 carburettors
- Mechanical and electrical fuel pump
- Electronic dual ignition
- Propeller speed reduction unit, engine mount assembly
- Electric starter (12V 0.6kW)
- Air intake system, exhaust system with muffler
- Slipper clutch

ROTAX 914 UL

- 4-cylinder, four-stroke spark-ignition engine with opposed cylinders with turbo charger
- Liquid cooled cylinder heads
- Air cooled cylinders
- Dry sump forced lubrication with separate oil tank
- Automatic valve adjustment by hydraulic tappet
- 2 carburettors
- 2 electrical fuel pumps
- Electronic dual ignition
- Propeller speed reduction unit, engine mount assembly
- Electric starter (12V 0.6kW)
- Air intake system, exhaust system
- Slipper clutch

1.11 Propeller

HTC 3 Blade

Airscrew with ground adjustable pitch made of CRP / GRP
Model ..... HTC 3 Blade 172 ccw 3B
Number of blades 3
Diameter ..... 172 cm
In-flight pitch adjustment ..... none

IVO Prop

Airscrew with in-flight adjustable pitch made of CRP / GRP
Model ..... IVO Prop medium ccw 3B
Number of blades 3
Diameter ..... 172.7 cm
In-flight pitch adjustment ..... electric, continuously adjustable

1.12 Unit Conversion

Multiply	by	to obtain
kts (knots)	1.852	km/h
km/h (kilometres per hour)	0.54	kts
mph (miles per hour)	1.61	km/h
km/h (kilometres per hour)	0.62	mph
ft (feet)	0.305	m
m (metres)	3.28	ft

1.13 Abbreviations and Terminology

ACL	Anti-Collision Light
AGL	Above Ground Level
ATC	Air Traffic Control
BCAR	British Civil Airworthiness Requirements
BUT	Bauvorschriften für Ultraleichte Tragschrauber – German design specification for microlight gyroplanes
CAS	Calibrated AirSpeed – indicated speed corrected for installation errors
ccw	Counter Clock Wise
CG	Centre of Gravity
CHT	Cylinder Head Temperature
CRP	Carbon Reinforced Plastic
CSP	Constant Speed Propeller
CT	Coolant Temperature
DA	Density Altitude
DOM	Date of Manufacture
DULV	Deutscher UltraLeichtflugVerband e.V.
Empty Wt	Empty Weight of the gyroplane including oil, cooling liquid and unusable fuel
G / g	G-loading as a factor of gravity
GEN	Generator
GPS	Global Positioning System
GRP	Glass Reinforced Plastic
HP	horsepower
hrs	hours
H/V	Height-Velocity
IAS	Indicated AirSpeed – airspeed values in this manual refer to indicated air speed
ICAO	International Civil Aviation Organization
In Hg	(Manifold) Pressure, corresponding to inch mercury
ISA	International Standard Atmosphere
JNP	JahresNachPrüfung – Annual Inspection
kW	kilowatt
LED	Light Emitting Diode
LH	Left-Hand
LOEP	List Of Effective Pages
ltr	Litre
MAP	Manifold Absolute Pressure
MCP	Maximum Continuous Power
MTOM	Maximum Take-Off Mass
OAT	Outside Air Temperature

PA	Pressure Altitude
POH	Pilot Operating Handbook
RBT	Rotor Bearing Temperature
RH	Right-Hand
RON	Research Octane Number
RPM	Revolutions Per Minute
sqm	Square metres
TAS	True AirSpeed – calibrated airspeed corrected for air density
TCU	Turbo Control Unit (engine)
TOC	Table Of Contents
TOP	Take-Off Power
V_A	Design manoeuvring speed
V_B	Design speed for maximum gust intensity
VFR	Visual Flight Rules
V_H	Maximum level-flight speed at maximum continuous power
V_{Hmin}	Minimum level-flight speed
V_{NE}	Never-Exceed Speed – maximum speed that must never be exceeded
VOX	Voice Operated eXchange, means: voice activation (level)
VPP	Variable Pitch Propeller
VSI	Vertical Speed Indicator
V_X	Speed for best angle of climb
V_Y	Speed for best rate of climb and maximum endurance
W&B	Weight and Balance
yrs	years

CONTENTS

INTENTIONALLY LEFT BLANK

SECTION 2 - LIMITATIONS

This section contains operating limitations, instrument markings and basic placards which are required for safe operation of the gyroplane, including its engine, and standard equipment or systems.

2.1 General

WARNING

The operation of a gyroplane demands professional pilot instruction and dedicated training on gyroplanes. The aircraft must only be flown by a properly qualified and licensed pilot..

WARNING

Positive G load on the rotor must be maintained during all flight manoeuvres. Do not perform any manoeuvres resulting in the sensation of feeling light or near weightless.

WARNING

Smoking on board is prohibited!

CAUTION

This gyroplane has been designed and tested for a safe design load of 3.5g at maximum take-off weight 500kg / 3.0g at maximum take-off weight 560kg. Note that flying at high speeds in turbulent air, especially in combination with aggressive manoeuvres or a steep turn, can easily create high loads on the aircraft.

NOTE

This gyroplane does not comply with the terms of the international authority for civil aviation (ICAO). Therefore, it is not permitted to operate it in international airspace unless specific intergovernmental agreements allow the flight. The reason for this is that there is no international common basis for gyroplanes type approval.

NOTE

During the approval/certification process all required safe loads have been successfully demonstrated. However, the gyroplane may be exposed to unpredictable and high loads especially when operated on rough surfaces, such as an unprepared grass strip. In this case it is even more essential to perform a thorough pre-flight inspection and have components and parts replaced, where needed.

NOTE

The choice, selection and use of this particular aircraft for the purpose chosen is at the sole discretion and responsibility of the owner/pilot. RotorSport UK Ltd and AutoGyro GmbH take no responsibility for your decision to fly.

This aircraft is operated under a Permit to Fly, or restricted Certificate of Airworthiness. This means that it is only allowed to be used for recreation, or flight training (where allowed). It also means that the aircraft has not been certified to any international standard, and that the components used in the aircraft are not necessarily certified parts. Whilst the manufacturer takes great care to ensure the parts are of appropriate quality, the level of guaranteed service is less than that with a certified aircraft, and pilot operators must consider this in their flight planning

In common with other aircraft of this type the Cavalon utilises a non-certified engine. This means that there may be a higher risk of engine failure than in a certified aircraft, with the associated risks of damage or injury as the result of an unplanned landing. Therefore strict compliance with the engine manufacturer's maintenance schedules, operational procedures and any additional instructions which may be given to you by AutoGyro GmbH, on behalf of the engine supplier, is essential. The aircraft must always be flown with the risk of engine failure in mind, and must not be flown over any areas where a forced landing cannot be safely executed.

Similarly the aircraft instruments (and other equipment) are non-certified. Gauges may fail completely, or part fail such that a gauge may under or over-read, or fluctuate. Good judgement must be used in monitoring instruments, and timely action taken should a reading be in doubt.

2.2 Environmental Limitations

Maximum wind speed or gust intensity ..... 40 kts
Maximum demonstrated crosswind component for take-off and landing ... 20 kts
Maximum tailwind component for take-off and landing..... 5 kts
Maximum demonstrated operating altitude ..... 12,000 ft
Demonstrated OAT for safe operation ..... - 20 to + 40 °C

CAUTION

When operating at high altitudes the engine performance is diminished, such that there is little available power if operating at 10,000ft with a 912ULS engine.

Care must be used operating a 914UL engine at high altitudes, as it is possible to overspeed the engine in level flight at max power. Take care to monitor the engine rpm gauge.

Aircraft and engine performance degrades with decreasing pressure altitude and increasing temperatures. Care must be taken to maintain safe flight when nearing operational temperature extremes.

WARNING

Do not consider flying in the likelihood of severe weather. Thunderstorms may develop rapidly with the risk of heavy precipitation or hail, severe turbulence with strong vertical air movements, and lightning strike. If, despite proper flight planning, a thunderstorm should be encountered, consider a precautionary landing to avoid the squall line. A lightning strike may damage the main rotor bearing. Thorough inspection and maintenance after lightning strike must be performed.

2.3 Colour Code for Instrument Markings

Red	Operating limits. Pointer should not enter red during normal operation
Yellow	Precautionary or special operating procedure range
Green	Normal operating range

2.4 Airspeed Limitations and Instrument Markings

For aircraft fitted with Rotorhead II

Air Speed	Marking	
V_{NE} Never Exceed Speed	Red radial	**160 km/h (100mph)**
V_B 130km/h (max design speed for strong gusty conditions)	Yellow arc	130 – 160 km/h (80-100mph)
Recommended manoeuvring speed range	Green arc	30 - **130 km/h (20-80mph)**
	Yellow arc	0 – 30 km/h (0-20mph)

For aircraft fitted with Rotorhead III and TOPP rotors (8.4m or 8.6m)
Check the aircraft operating limitations!

Air Speed	Marking	
V_{NE} Never Exceed Speed	Red radial	**195km/h (120mph)**
V_B 130km/h (max design speed for strong gusty conditions)	Yellow arc	130 – 195 km/h (80-120mph)
Recommended manoeuvring speed range	Green arc	30 - **130 km/h (20-80mph)**
	Yellow arc	0 – 30 km/h (0-20mph)

WARNING

The maximum speed V_{NE} must never be exceeded!

WARNING

Depending on installed optional equipment V_{NE} may be lower! Supplemental information in SECTION 9 must be respected!

WARNING

Sudden or large forward control inputs must be avoided at all times in flight. Do not exceed 80mph when flying through turbulence, high gusts or rough winds!

* The U K V_{NE} approved to BCAR Sect T is 100 mph or 120mph with Rotorhead III and TOPP rotors. At the time of writing the German BUT V_{NE} is160 km/h,
Ensure the red line is marked in line with your local country approval!

2.5 Rotor Speed Limitations and Instrument Markings

Rotor Speed	Marking	
Rotor speed limit	Red radial	**610 RPM**
Rotor speed caution range	Yellow arc	550 – 610 RPM
Normal range	Green arc	200 – 550 RPM
Maximum pre-rotation speed	Yellow radial	**220 RPM (Rotorhead II) 320RPM (Rotorhead III)**

2.6 Power Plant Limitations and Instrument Markings

Engine Speed	Marking	
Maximum engine speed	Red radial	**5800 RPM**
5 minute take-off power regime	Yellow arc	5500 – 5800 RPM
Maximum continuous power	Green arc	1400 – **5500 RPM**
Recommended pre-rotation clutch speed	Green radial	**2000 RPM***
	Yellow arc	0 – 1400 RPM

* Use 1600 RPM recommended engine rpm on aircraft with red OVERDRIVE push button.

Engine Oil Temperature	Marking	
Maximum oil temperature	Red radial	**130 °C**
	Yellow arc	110 – 130 °C
Normal range	Green arc	90 – 110 °C
	Yellow arc	50 – 90 °C
Minimum oil temperature	Red radial	**50 °C**

NOTE

Oil temperature is measured in the oil tank, and is the temperature of the oil as it exits the engine. The oil is then cooled in the oil cooler, and returned to the engine.

Cylinder Head Temperature (CHT)	Marking	
Maximum cylinder head temperature	Red radial	**135 °C**
	Green arc	50 – 135 °C

Alternatively (depending on engine configuration)

Coolant Temperature (CT)***	Marking	
Maximum coolant temperature	Red radial	**120 °C**
	Green arc	50 – 120 °C

***Whether CHT or CT is indicated depends on cylinder head design

Engine Oil Pressure	Marking	
Maximum oil pressure	Red radial	**7 bar**
	Yellow arc	5 – 7 bar
Normal range	Green arc	2 – 5 bar
	Yellow arc	0.8 – 2 bar
Minimum oil pressure	Red radial	**0.8 bar**

Manifold Pressure* ROTAX 912 ULS	Marking	
Maximum manifold pressure	Red radial	**31 In Hg**
	Yellow arc	27 – 31 In Hg
Maximum continuous MAP	Green arc	0 - **27 In Hg**

Manifold Pressure* ROTAX 914 UL	Marking	
Maximum manifold pressure	Red radial	**39 In Hg**
	Yellow arc	31 – 39 In Hg
Maximum continuous MAP	Green arc	0 - **31 In Hg**

* Applicable only if installed, MAP gauge is optional equipment although recommended (and required in some markets) in conjunction with an adjustable pitch propeller. MAP limits do not apply at 912ULS engine speeds above 5100 RPM, marked by a yellow triangle at the RPM gauge / engine speed indicator.

2.7 Weight and Balance

2.7.1 Weight Limits

Maximum take-off mass (MTOW): .....450 kg / 500 kg / 560Kg*

*see Type Approval or Type Certificate Data Sheet

CAUTION

The take-off weight is the total weight of the gyroplane including empty weight, optional/additional equipment, occupants, fuel, and luggage at take-off. The maximum value specified above must never be exceeded.

Maximum weight in RH seat (incl. compartment behind seat): .....110 kg
Maximum weight in LH seat (incl. compartment behind seat): .....110 kg
Maximum total weight in cockpit (both seats + compartments):.....200 kg
Minimum total weight in both seats: .....65 kg

NOTE

Pilots in the right hand seat weighing less than 65 kg must carry corresponding ballast during solo operation (which may be located in the baggage compartment, around the occupant in a form such as sheet lead under the seat cushion, or securely restrained on the second seat)..

Storage compartments behind seats

Maximum weight in each storage compartment (2 ea.).....10 kg

NOTE

When loaded, the weight in each storage compartment has to be deducted from the maximum weight in the respective seat.

2.7.2 Centre of Gravity (CG) Limits

The centre of gravity is considered to be within limits if all weight limits above are respected. For details see SECTION 6 of this manual.

2.7.3 Demonstrated Structural Load Factors

Demonstrated positive load factor (500 kg)..... + 3.5 g
Demonstrated negative load factor (500 kg) – structural limit..... - 1 g
Demonstrated positive load factor (560 kg)..... + 3.0 g
Demonstrated negative load factor (560 kg) – structural limit..... - 0.5 g

Important note: the indication of a demonstrated negative load factor represents a structural limit only. In flight, the limitations (see 2.9) have to be respected at all times.

2.8 Flight Crew

Minimum crew is one pilot in the RH seat.
Harness in the LH seat must be fastened and tight, if not occupied.
The LH flight controls must never be restricted by passenger or objects. Passengers must be briefed.

2.9 Kinds of Operation

Day-VFR operation is approved for all Cavalon gyroplanes

In markets where night operation is permitted, night-VFR operation is approved for Cavalon gyroplanes when fitted with the required minimum equipment.

Aerobatic flight is prohibited!

NOTE

Manoeuvres involving bank angles of more than 60° are considered to be aerobatic flight.

Low-G manoeuvres are prohibited!

WARNING

Any maneuver resulting in a low-G (near weightless) condition can result in a catastrophic loss of lateral/roll control in conjunction with rapid main rotor RPM decrease. Always maintain adequate load on the rotor and avoid aggressive forward control input performed from level flight or following a pull-up.

Excessive side-slip is prohibited!

WARNING

Side slip may be performed only with proper training and within safe boundaries. Use gentle pedal input for initiation and stabilization. Do not rely on airspeed indication in side slip. Never perform abrupt control stick input into the direction of motion. Be aware that excessive side slip particularly in strong/gusty conditions may result in an uncontrollable and unrecoverable attitude..

Flight in icing conditions is prohibited!

NOTE

Icing may occur even at temperatures above freezing!

Operation in strong gusts or wind speeds of more than 72 km/h (40 kts) is prohibited!

2.10 Fuel

2.10.1 Approved Fuel Grades

Preferred fuel

AVGAS UL91 (ASTM D7547)
EN 228 Super or EN228 Super plus (min. RON 95)

Alternate fuel

AVGAS 100 LL (ASTM D910)

NOTE

When refuelling, attach the earth line to the exhaust pipe to prevent static electrical discharges!

NOTE

If none of the mentioned fuels is available, consult the corresponding European Standard EN228 as a reference. The fuel needs to be assessed at least in the octane number and the maximum ethanol content equal or better.

NOTE

AVGAS 100 LL places greater stress on the valves seats due to its high lead content and forms increased deposits in the combustion chamber and lead sediments in the oil system.

For operational constraints and maintenance aspects when using preferred fuel and alternate fuel, refer to the engine manufacturer's manual.

2.10.2 Operation with leaded AVGAS fuels

If the engine is operated more than 30 % of engine operating time with leaded AVGAS fuels, the following maintenance operations are necessary in addition by latest after every 50 operating hours:

- change of oil filter
- change of engine oil
- oil level check, etc.

According to the most recent engine manufacturer´s maintenance manual

NOTE

When operating primarily on leaded AVGAS fuel, it is recommended to make a change of engine oil every 25 operating hours.

2.10.3 Fuel Tank Capacities

Maximum tank capacity..... 100 ltr

2.10.4 Unusable Fuel

Unusable fuel quantity ..... 2 ltr

2.11 Minimum Equipment

2.11.1 Minimum Equipment Day VFR

The following equipment must be operative for flight under day VFR conditions:

- Air speed indicator
- Altimeter
- Magnetic Compass
- Side slip indicator
- Rotor RPM indicator
- Outside Air Temperature (OAT) and Rotor Bearing Temperature (RBT) indicator
- Engine instruments (oil pressure, oil temperature, RPM, CHT or CT)
- Pre-rotator

2.11.2 Minimum Equipment Night VFR

The following additional equipment must be operative for flight under UK Night-VFR rules:

- External generator installation (Gen2)
- Instrument and panel lighting
- Cockpit lighting
- Position/navigation/strobe lights fitted on pedestal spacers
- Nose-mounted taxi lights
- Underbody-mounted landing light
- Heated pitot-tube and associated LED indicator
- Alternate static pressure system
- Gyroscopic bank and pitch indicator (Aspen EFD1000 PFD or VFR PFD)
- Gyroscopic direction indicator (Aspen EFD1000 PFD or VFR PFD)
- Vertical speed indicator
- Secondary pressure altitude indicator (Aspen EFD1000 PFD or VFR PFD)
- Clock (optional fitment)
- Low voltage warning system
- First-aid kit (pilot carry-on)
- Electric torch for each crew member

NOTE

It is the pilot/operators responsibility to ensure the aircraft is properly equipped for night flight in compliance with the rules of the country of operation!

2.12 Placards

In clear view of the pilot:

Only VFR day use is approved

Aerobatic flight prohibited!

Low-G manoeuvres prohibited!

Flight in icing conditions prohibited!

For additional limitations see Flight Manual!

Where night use is permitted and required equipment installed, this placard states ‘Only VFR use is approved’

Max. gross weight: _____

Empty weight: _____

Max. useful load: _____

At RH seat:

Max. weight in seat:	**110 kg**
Min. weight in seat:	**65 kg**

At LH seat:

Max. weight in seat:	**110 kg**

Solo from right hand seat only

Occupant warning (RH and LH seat):

OCCUPANT WARNING

This aircraft has not been certified to an international requirement

At each storage compartment behind seats:

Max. load:	**10 kg**

W&B must be respected!

At fuel filler neck:

Min. ROZ 95
AVGAS 100LL

Tank Capacity 100 litres

At oil filler neck:

Engine Oil: _____

Approved oil types see engine manual!

At fuel shut-off valve:

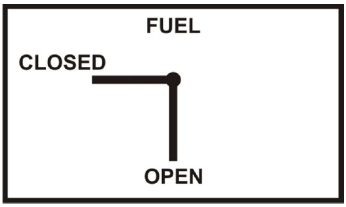

At both static ports:

Static Port

Do not obstruct!

Alternative placarding as fitted to UK aircraft and for all markets from 2017 (subject to local language requirements)

In clear view of the pilot on centre panel

:

The MTOW is as shown within the aircraft flight approval documents

For an aircraft not equipped for Night-VFR flight

OPERATING LIMITATIONS

Aerobatic Limitations

Aerobatic manoeuvres are prohibited.

Manoeuvres involving a deliberate reduction in normal 'g' shall be avoided.

CG Range Limits (Gyroplane) – refer to Pilots Handbook data.

Airspeed Limitations

Maximum Indicated Airspeed (Vne): 100mph

Other Limitations

This aircraft shall be flown by day and under Visual Flight Rules only.

Smoking in the aircraft is prohibited

For an aircraft equipped for Night-VFR flight

OPERATING LIMITATIONS

Aerobatic Limitations

Aerobatic manoeuvres are prohibited.

Manoeuvres involving a deliberate reduction in normal 'g' shall be avoided.

CG Range Limits (Gyroplane) – refer to Pilots Handbook data.

Airspeed Limitations

Maximum Indicated Airspeed (Vne): 100mph

Other Limitations

This aircraft shall be flown under Visual Flight Rules only.

Smoking in the aircraft is prohibited

Note! Vne must be shown to match the published operating limitations, and may be in mph or km/h – and 100mph or 120mph.

Occupant warning (on the centre instrument panel and adjacent to each seat):

OCCUPANT WARNING

This aircraft has not been certified to an international requirement

At each storage compartment behind seats:

At fuel filler neck:

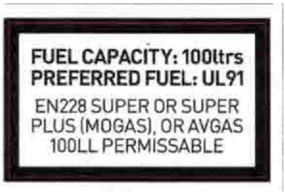

At oil filler access panel:

At fuel shut-off valve:

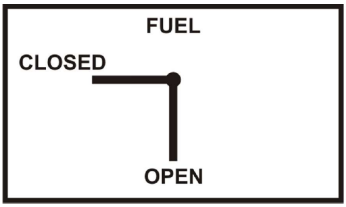

Or

At both static ports:

Fitted to the doors inside

Fitted to the doors outside

Fitted to the instrument panel

Continuously lit Low Volt lamp indicates electrical demand exceeds supply, and the battery is being drained. If lit in flight, reduce demand until unlit. If not possible, expedite landing.

Pre-rotator & rotor brake interlock release

GPS placard (where a GPS, Ipad or equivalent device is fitted)
(Placard may be a different shape)

Where equipped for Night-VFR flight

Do not rely on this display. Day VMC only. GPS unit not for navigational use. The unit, software & charts are not approved or certified to any national standard. Warning! Charts or software may not be up to date.

Do not rely on this display. VMC only. GPS unit not for navigational use. The unit, software & charts are not approved or certified to any national standard. Warning! Charts or software may not be up to date.

Fire warning lamp:

FIRE WARNING
When flashing
RED

On keel tube fin (where fitted, both sides)

NO STEP

Circuit breakers

CIRCUIT BREAKERS
Only attempt to reset (once) if essential for continued safe flight

Compass deviation placard.

COMPASS DEVIATION			
For	N	30	60
Set			
For	E	120	150
Set			
For	S	210	240
Set			
For	W	300	330
Set			
Calibration by: date:			

All Cavalons are fitted with a fireproof plate mounted in the left footwell that identifies the AutoGyro aircraft serial number.
UK Cavalons are fitted with a fireproof plate with the aircraft registration number and UK serial no. marked on it, on front of the instrument panel.
Other markets may require specific aircraft identifications, it is up to the owner operator to ensure compliance.

Note that all placards must have the same units of measure as the instruments.
Exact format will vary depending on the production method and language.

INTENTIONALLY LEFT BLANK

CONTENTS

INTENTIONALLY LEFT BLANK

SECTION 3 - EMERGENCY PROCEDURES

This chapter contains the check lists and procedures to be executed in emergency situations.

Emergencies due to defects of the gyroplane or its engine are extremely unlikely if the aircraft is checked thoroughly before each flight, and maintained in accordance with the AMM. If there an emergency does occur, follow the appropriate guidelines below. These procedures do not replace the pilot's appreciation of the individual situation.

3.1 Engine Failure

In case of an engine failure the following action is recommended:

Engine failure during take-off run

- Maintain directional control using sensitive but appropriate pedal input
- With the rotor/stick remaining aft, let the gyroplane decelerate. Wheel brakes may be used to assist
- At walking speed level-off rotor disc, use wheel brakes and bring rotor to a stop

Engine failure after lift-off and below 150 ft AGL

- The climb-out should be performed according to the Height-Velocity-Diagram in CHAPTER 5
- When engine failure occurs, immediately lower nose to enter glide attitude
- Continue straight ahead – a 180 turn back to the airfield may be a bad option
- Maintain airspeed until ground is approached, then perform flare
- Depending on final approach speed be prepared to flare more distinctly than normal

Engine failure at or above 150 ft AGL

- Consider wind speed and direction
- Select a suitable landing site
- If time allows, a restart may be attempted, see "Air restart procedure" below
- Perform a landing into wind and/or upslope if possible
- Prior to touch-down switch OFF Main Switch

Engine failure at night

- Consider wind speed and direction
- Both landing lights should be turned on at 400ft or below
- Select a suitable landing site – the landing lights make the ground visible in full dark from around 400ft
- If time allows, a restart may be attempted, see "Air restart procedure" below
- Perform a landing into wind and/or upslope if possible
- Make a faster descent at 60KIAS (~70mph), to allow more time in the flare to make a safe landing.
- Do not turn the main switch off, because this will turn off all lighting. Be prepared to turn the switch off if there is a risk of an accident.

WARNING

Engine failure at high speed, hands-off, will result in a nose drop, requiring pilot intervention to raise the nose. At light weight the nose drop will be rapid.

WARNING

Always plan your route to remain within safe gliding distance to areas where a safe forced landing can be performed in case of an engine failure. A landing in high trees or open waters may end fatally.

NOTE

The best engine-off glide ratio is about 1:3 at 90 km/h (55-60mph). Depending on a possible headwind the glide may be extended by slightly increasing airspeed. It is heavily recommended to train your forced landing capabilities regularly, preferably with a qualified flight instructor.

3.2 Air Restart Procedure

- Check fuel valve OPEN
- Check fuel pump(s) ON
- Check both magnetos ON
- Throttle slightly open
- With the left hand, turn the Main Switch/Starter key completely to OFF, then START
- If possible, allow engine and oil to warm-up before full power is applied

NOTE

The starter interlock function prevents inadvertent starter engagement. Before attempting an engine start, the interlock must be reset by turning the Main Switch/Starter key to OFF.

3.3 Landing into Trees or High Vegetation

- Assume the surface of the treetops or vegetation as level
- Plan touch-down and flare with minimum ground speed and minimum rate of descent
- As soon as the wheels contact the vegetation bring the rotor disc to level attitude to avoid partial blade tip contact with vegetation
- Shut down engine by switching magnetos OFF and master switch OFF

3.4 Degradation of Engine Power

A gradual decay in engine RPM, accompanied by a rough running engine or even vibration may be an indicator for carburettor icing. In this case, continue with a high power setting and change altitude into air which is less susceptible to carburettor icing.

If the situation cannot be corrected be prepared for further loss of power and ultimately engine failure.

NOTE

The phenomenon of carburettor icing is extremely unlikely with these engine types. For the 912ULS installation the carburettor inlets draw warm air from within the engine compartment. For the 914UL installation, the air is heated by the turbocharger before entering the carburettor. Note that this arrangement can work properly only when the engine is at normal operating temperature.

3.5 Evacuating the Aircraft

In normal circumstances occupants should never leave the aircraft while the propeller or the rotors are turning. If abandoning the aircraft in an emergency the pilot should turn off the engine magneto switches and turn the master switch to “OFF” if this can be done without endangering the occupants.

If abandoning the aircraft with either the propeller and/or the rotors turning the occupants should follow a path in line with the nose of the aircraft, to minimise the risk of being struck by either the rotor or the propeller.

Occupants should be briefed before flight on emergency evacuation procedures, including:

- Actions to be taken in the event of a forced landing
- Operation of the seat harness
- Disconnection of any intercom leads or other connections to the aircraft
- How to open the doors
- How to safely exit and move away from the aircraft

3.6 Smoke and Fire

Indications of smoke should be treated in the same way as a fire.

NOTE

The fire warning system (in markets where fitted) will illuminate a RED flashing warning lamp on the panel when the special cable in the engine bay has melted due to the effect of high temperatures (fire). This lamp shows solid red when a system fault is detected.

In case of fire the following action is recommended:

Smoke or fire on ground

- Both magnetos OFF and master switch OFF to shut-down engine and fuel pumps
- Close fuel shut-off valve
- Evacuate aircraft
- Extinguish fire and have damage inspected

Fire in flight

- Open ventilation for fresh air
- Initiate an emergency landing
- Initiate emergency call, if time and situation permits
- As soon as a power-off landing can be assured, close fuel shut-off valve, shut down engine by switching magnetos OFF and master switch OFF
- Continue procedure as described in “Engine Failure” and “Smoke or fire on ground”

3.7 Off-field Landing

A precautionary landing at a non-prepared site may be performed at pilot’s discretion in order to avoid unexpected weather, in case of severe illness of the pilot or a passenger, or if technical defects are suspected, for example sudden and severe rotor vibrations.

- Select a suitable landing site from safe altitude, considering slope, wind speed and direction
- Fly a reconnaissance pattern to check for obstacles, especially power lines, wires, and cables in the approach and go-around path
- Overfly the landing site to check for obstructions such as fences, ditches, rocks, height of vegetation, and select most suitable touch-down zone
- Perform a normal approach and touch-down into wind with minimal ground speed

3.8 Flight Control Malfunction

In case of a flight control failure the gyroplane can be controlled with the remaining primary and secondary controls, including power and trim. An immediate reduction of power, and corresponding reduction in speed may be necessary to avoid pitch oscillations (phugoid) or other effects affecting dynamic or static stability. Navigate to a suitable landing site with wide and shallow turns and approach against the wind.

3.8.1 Engine Power Control / Throttle

Throttle jammed open or max

Navigate to a suitable landing site with the power set. If over safe terrain, magneto switches may be used to control power. When within gliding distance to the selected landing site, shut-down engine to perform a power-off landing as per Emergency Procedure “Engine failure”.

NOTE

In case of a control cable breakage the carburettor will be automatically set to full throttle position.

Throttle jammed closed

Land as per Emergency Procedure “Engine failure”. Residual power may be used to extend the glide.

3.8.2 Rudder Malfunction

In case of a stuck or loose rudder, continue flight to a suitable, preferably wide landing site that allows a landing into the wind. If necessary reduce power to avoid excessive side slip. Align gyroplane prior to touch-down, using engine torque or lateral control input to the side where the nose is pointed.

3.8.3 Rotor Head Control

In case of a rotor head control malfunction, control pitch attitude using careful trim input and power setting. Use rudder for directional control and for shallow turns. In some conditions it may be appropriate to reduce power/speed in order to avoid phugoid effects or a possible negative yaw-roll coupling. Approach landing site with wide and shallow turns.

3.8.4 Trim runaway

Failure of a trim selector switch or pneumatic valve may result in trim runaway (where the trim system runs to one extreme and pushes the control stick accordingly). Although the average pilot is able to resist the out-of-trim stick force and continue to fly the aircraft it may be possible to reduce the stick load by intervention:

(i) High forward stick load required to prevent aircraft nose rising (this will be coincident with a high air-pressure reading) – briefly turn the Flight/Brake selector to “Brake” to deplete system air pressure. If the air compressor is heard to start and the pressure rises again then pull the circuit-breaker marked “Comp” to stop the compressor. Repeat the brief selection of “Brake” to deplete system air pressure as required.

(ii) High aft stick load required to prevent aircraft diving (this will be coincident with low or zero air pressure) – check “Comp” circuit breaker, if activated push to reset then try to trim aircraft nose-up. If unsuccessful then continue to expedited landing. Note: reset the circuit-breaker once only.

(iii) High roll-left or roll-right stick load required to maintain balanced flight (coincident with high air-pressure reading). Pull the “Comp” circuit breaker to prevent further increase in air pressure and attempt to re-trim. If unsuccessful then continue to expedited landing. Do not select “Brake” in an attempt to reduce air pressure as this will disturb the pitch trim (in which the out-of-trim forces are significantly higher)

3.9 Pitch oscillation recovery

There are generally two types of pitch oscillation: that caused by pilot over control ('PIO, Pilot Induced Oscillation') and that caused by aerodynamic oscillation.
PIO is not generally found on two seat gyroplanes due their inherent stability. It is initiated by the pilot over-controlling the stick. If a situation develops where a divergent aircraft pitching oscillation is occurring in sympathy with fore-aft control stick inputs, firstly stop the control input – do NOT try to control PIO with the stick.
For both situations, smoothly closing the throttle whilst maintaining a level flight attitude will return the aircraft to a stable, slow speed condition very quickly, from which the pilot can recover to normal flight.
Recovery from PIO or aerodynamic oscillation can result in height loss.

3.10 Vibration

A gyroplane is subject to a number of out of balance forces which will generate different levels of vibration depending on the engine and rotor rpms, and on loading conditions. Rotors are normally balanced two seated, so a reduction in occupant loading will naturally change the rotor response.

1. Engine and propeller. Vibration in this area will change with engine rpm, and can therefore be affected and isolated by the pilot. The propeller is normally balanced to less than 0.1ips, meaning low vibration. Vibration will increase as the propeller gets dirty, and will also increase if damaged. A sudden change in flight will indicate a fault has developed, either through an impact (loose luggage, bird strike etc. passing through the propeller) or by some mechanical failure. In the event the pilot should make a precautionary landing for evaluation. Propeller damage may also be evident from a change in noise level.
Upon landing, carefully check the propeller for damage, loose bolts or evidence of mechanical failure within the prop or engine. Especially check the engine to engine bearer connections, and the engine bearer to airframe connections.

2. Rotor.
Rotors will vibrate in flight due to tracking errors (side to side stick shake), rotor CG misalignment with the axis of the bearing in the flat plane (oscillatory stick shake), and also in the vertical plane (two per rev shake). The amount of shake will not suddenly change in flight or between flights unless there has been mechanical failure, external influence or rotor strike.
Rotor vibration also depends on the rotor rotational speed, which in turn is dependent on airspeed and aircraft loading.
Vibration will increase (and performance decrease dramatically) with dirt build up on the rotor blades, so before any analysis make sure they are clean.
If there is a change in vibration in flight make a precautionary landing and investigate. If on rotor startup, stop and investigate.
Check items:
Rotor impact with tail of aircraft.
Hanger damage e.g. twist or distortion of trailing edge.
Blade bent from ground handling.
If after a recent re-assembly of the rotor, that the blades and hubs are serial-number matched, and that the shim washers are correctly matched to the hub bar and rotor tower.

A reduction in vibration may be caused by increased flexibility between the rotor head and the occupant. This may be control system looseness, so check all system joints for tightness, and also for cracks at the base of the mast. Check security of all fastenings between the rotor and the pilot

3.11 Other equipment failure

Good judgement must be used in monitoring instruments, and timely action taken should a reading be in doubt. If in doubt, make a precautionary landing and resolve the issue rather than continuing a flight.
Actions recommended:
ASI failure: In level flight fly with an engine rpm of 4,200 lightly laden to 5,000 heavily laden which will give approx 60 to 80mph. When descending (nose down) throttle back to approx 3,000 to 3,500rpm to prevent overspeed. Continue to your designated landing site, maintaining speed for a flare on landing in the final descent. Leave plenty of space to land in should the flare be prolonged. Experience will aid judgement of the best engine rpm to maintain to match the desired flight speed and payload.
Altimeter failure: In a gyroplane it is reasonably easy to judge height. If in controlled airspace ensure the controlling authority is informed to prevent traffic conflict. Otherwise continue to a safe landing using navigational skills to avoid potential collisions.
Compass failure: Resort to map, aided by GPS if available, fly at a speed to suit navigational requirements or make a precautionary landing if unable to identify position.
Rotor RPM gauge failure: This is not essential for safe flight, and rotor rpm cannot normally be affected in flight unless significant “g” or negative “g” is exerted – and then will only provide an indication of the rpm. If failed in flight, repair on landing
Engine RPM: The engine is rpm self-limiting by propeller pitch in flight. If the gauge fails, replace on landing. Use audio cues to establish rpm
Oil pressure, oil temp and water temp. A failure of one gauge can indicate an engine fault or simply a gauge fault. Watching the other gauges will indicate the likely failure mode.
For example,

1. Gauge suddenly goes to full scale deflection, other gauges reading normally – likely gauge fault
2. Oil pressure falls to zero, possible loss of pressure. Stop engine, make precautionary landing
3. Water temp gradually or suddenly rises above max temp. Possible loss of coolant. Stop engine, make precautionary landing
4. Oil temp suddenly falls to zero, other gauges reading normal – probable gauge failure.
5. Oil temp rises above maximum, other gauges normal – possible very low oil level, blocked radiator or thermostat. Stop engine, make precautionary landing.
6. Fuel level gauge suddenly falls to zero or FSD. Probable gauge failure, but always cross check to predicted fuel burn. Low fuel light will light as a backup.

Sudden, large deflections are normally unlikely, with the exception of loss of pressure readings.

3.12 Door open in flight.

A door open in flight is NOT catastrophic. The door hinge line is angled to the oncoming airflow such that if left open before take-off, or opened in flight, the oncoming airflow will naturally close the door.

Note, yawing the aircraft such that the open door is downwind will allow the door to open more, but on straightening out the oncoming airflow closes the door. If the yaw is such that the open door is upwind, then the oncoming airflow keeps the door firmly shut.

In the event of this occurrence, fly the aircraft and ignore the open door until it is safe to close it. This will be either on the ground, by a passenger (if it is on their side) or by slowing and trimming the aircraft at a safe speed that allows the pilot to release hand(s) for the closure task.

3.13 Warning and Caution Lights

3.13.1 GEN (orange) or Low Volt (orange) Indicator Light

The GEN lamp, when lit, indicates that there is no voltage being supplied from the internal generator/regulator circuit to the battery. The Gen2 lamp, when lit, indicates that there is no voltage being supplied from the external generator to the battery.

Both are normally lit when the engine is stationary or at very low rpm.

These lamps are normally not lit in flight, but may be seen to pulse gently in low light conditions.

If the GEN and GEN2 lamps and the LOW VOLT lamp are on with the engine running at more than 2,500rpm, then it is likely that the charging circuits have failed, and that the aircraft is operating on battery power alone.

If only the LOW VOLT lamp is lit, then the aircraft voltage demand has exceeded supply, and demand must be reduced in order for the lamp to extinguish. NOTE! When lit, this lamp also indicates that the strobes, nav lights, anti-collision lights and 12v socket have been turned off automatically, with automatic reconnection when the supply exceeds demand.

If only the LOW VOLT lamp is lit, then the aircraft voltage demand has exceeded supply, and demand must be reduced in order for the lamp to extinguish. NOTE! When lit, this lamp also indicates that non-essential services and 12v socket (where fitted) have been turned off automatically, with automatic reconnection when the supply exceeds demand.

<u>Required Action</u>

ROTAX 912 ULS: If any of the indicators are permanently lit, switch off all unnecessary electrical consumers and land at the nearest airfield where maintenance can be performed. The battery is expected, if in good condition, to provide 30 minutes* of reserve power to supply the aircraft instrumentation and avionics, after which time electrical equipment may cease to function.

ROTAX 914 UL: If any of the indicators are permanently lit, switch off all unnecessary electrical consumers, it is recommended to perform a precautionary landing within 30 minutes. The battery is expected, if in good condition, to provide 30 minutes* of reserve power to supply the aircraft P2 fuel pump, instrumentation and avionics, after which time electrical equipment may cease to function. In the event of battery failure the P1 fuel pump is supplied with electrical power directly from the engine's internal generator so the engine may continue to run. However, be prepared for an engine failure.

*depends on capacity of batteries

Further information (914UL engine version)

No power in the cabin indicates either the main circuit fuse has failed, or that the battery has failed and the pump protection relay (since 09.2013 or retrofitted) has opened. In this case the P1 primary fuel pump remains powered by the regulator directly, maintaining fuel supply to the engine. The turbo control unit is not powered in this instance, and will remain in whatever position it was in when power was lost – so mixture and manifold pressure control will be lost. Take care to only use the minimum power required to land safely to prevent engine damage.

In this case the primary fuel pump will continue to run until the engine alternator stops providing electrical energy. If required, fuel supply can be shut off via the fuel shut-off valve.

NOTE

A gently pulsing GEN indicator light (visible in low light conditions and depending on date of manufacture) is normal and indicates proper function of the generator.

3.13.2 Low Volt

Battery voltage of the system has dropped below a safe value. Refer to chapter above. Non-essential services and the 12V power receptacle will be disabled automatically.

3.13.3 BOOST WARN Light 'Boost' (red) - only ROTAX 914 UL

Continuously lit

If continuously lit, the maximum admissible boost pressure was exceeded. Reduce power into normal operating range and consider restricted engine performance or boost control malfunction. Record duration and have maintenance action performed.

Blinking

When blinking, the allowable 5 minutes take-off power time limit has been exceeded. Reduce power into continuous range. Record duration and have maintenance action performed.

3.13.4 BOOST CAUTION Light 'Caution' (orange) - only ROTAX 914 UL

A blinking BOOST CAUTION light indicates a problem with the turbo/boost control, its sensors or the servo. Engine power is degraded and continuous operation may lead to engine damage. Perform a precautionary landing considering reduced engine performance and be prepared for engine failure.

3.13.5 Fire (red / if installed)

Refer to emergency procedure “Smoke and Fire” and Flight Manual Supplement.

The Fire Warning system works by constantly checking the resistance of a special cable mounted in both the engine bay and in the battery and fuel pump bay. This cable contains two wires where the insulation between the two wires melts beyond 180degC, creating a short circuit. The cable has a resistor at the end of the cable to give a known standard resistance of the detection loop.

This lamp will flash three times when the keyswitch is turned on. This indicates the system has made a satisfactory self test. The lamp will then normally remain off.

The lamp will light a solid red when a fault has been detected (eg a short circuit to ground or open circuit). A repair is required.

The light will flash brightly if a closed circuit is detected. This indicates that the cable temperature has exceeded 180degC, and therefore that a fire may be present. Action as ‘3.6, Smoke and Fire’

3.13.6 Low Fuel (red / if installed)

The LOW FUEL warning light is triggered as soon as 5 litres or less of useable fuel remain in the tank. Perform a power-on landing at the nearest suitable location and be prepared for engine failure after approximately 10 minutes remaining flight time.

3.13.7 Device (if installed)

This indication serves a ‘master caution’ for glass cockpit solutions. Refer to the respective flight manual supplement and the glass cockpit manufacturer’s documentation.

3.13.8 Fan (orange, if installed)

The thermo switch of the engine mounted electrical blower has closed, fan is activated. Monitor engine instruments and mind higher electrical power consumption. If possible, reduce engine power and increase speed. This advisory lamp is deleted in later aircraft

3.13.9 Water Temperature Indication (Water Temp. / if installed)

The water temperature indication illustrates three colour-coded temperature ranges of the engine cooling water:

INDICATION	TEMP.RANGE	CORRECTIVE ACTION
Red light	Above 120 °C	Further reduce power. If condition cannot be corrected, land as soon as practicable.
Yellow light	105 – 120 °C	Reduce power and increase air speed.
Green light	Below 105 °C	Normal operation

Note. Following market feedback this lamp has been changed to illuminate RED at 120 °C only. The yellow and green colours are not shown in 2018 models.

3.13.10 Water Level Indication (red / if installed)

The Water Level Indication warning light is triggered as soon as coolant water in the expansion tank is below minimum level. If indication is lit, cross-check Water Level Indication with Water Temperature Instrument or Cylinder Head Temperature Instrument, monitor Water Temperature Instrument or Cylinder Head Temperature Instrument and consider landing. Be prepared for engine failure.

3.13.11 Oil Pressure Indication (red / if installed)

Lighting up of the Oil Pressure Indication signals a problem within the lubrication system, which is characterised by a drop of oil pressure to or below 0.8 bar. If Oil Pressure Indication is lit cross-check with Oil Pressure Instrument, monitor Oil Pressure Instrument and consider landing. Be prepared for engine failure.

3.13.12 Clutch (orange)

Continuous light

Indicates a slipping clutch during prerotation.

Reduce engine RPM to closer match the rotor speed, and be more gentle when increasing power.

Blinking

Intended take-off run with low rotor RPM – danger of blade flapping

Reduce power immediately, and stop if take-off has started. Re-apply the pre-rotator and increase rotor RPM first. If the correct take-off rotor RPM cannot be reached, abort take-off.

3.14 Parameters out of Limits

PARAMETER	EXCURSION	CORRECTIVE ACTION
Engine Oil Temperature	Upper **limit** or **yellow arc**	Reduce power and increase air speed. If condition cannot be corrected, land as soon as practicable.
	Lower **limit**	Allow engine to warm-up on ground.
	Within lower **yellow arc**	Uncritical as long as oil temperature has reached normal operating range at or after take-off.
Cyl. Head Temperature	Upper **limit**	Reduce power and increase air speed. If condition cannot be corrected, land as soon as practicable.
Engine Oil Pressure	Upper **limit** or **yellow arc**	Reduce power. If condition cannot be corrected, have maintenance action performed prior to next flight.
	Lower **limit**	If combined with other indications, such as rising oil temperature or unusual engine behaviour, shut-down engine and perform a power-off landing as per Emergency Procedure “Engine failure”. Otherwise, monitor engine instruments carefully and land as soon as practicable. Have maintenance action performed.

3.15 Outside Air Temperature and Rotor Bearing Temperature

Outside Air Temperature (OAT) and Rotor Bearing Temperature (RBT) indicators are provided for condition monitoring of the rotor bearing. Both readings should be more or less equal. If, in stabilized conditions, RBT rises suddenly above OAT, have bearing inspected.

Note; from the introduction of rotorhead III in 2018 the rotor bearing temp display is deleted, because market feedback determined that this indication provided no useful information.

3.16 Loss of Visibility

In case of canopy misting, open air vents and windows to ensure proper ventilation. If the situation cannot be corrected or occurs suddenly, such as after a bird strike or canopy icing, maintain safe attitude by visual reference to the sides, using the open sliding window, if necessary.

When at safe height, stabilize the aircraft at 90 km/h and clear the viewing obstruction by using a hand through the sliding window or from the inside.

If forward vision is still impaired or lost, continue flight in a side slip, using the open sliding window for visual reference. Land at the nearest suitable location and align just prior to touch-down.

3.17 Rotor Icing

A more than normal or constantly increasing power demand may be caused by an iced-up rotor system. This could ultimately result in a condition where altitude cannot be maintained, even at maximum power. An iced-up rotor system can also cause severe vibration. If any of the signs for rotor icing is evident, carry out a precautionary landing.

3.18 Landing with a Deflated Tyre

Plan to land directly into the wind with minimum rate of descent at touch-down, if possible on a grass runway. Maintain directional control with adequate pedal input. Consider the use of some propeller thrust to increase rudder effectivity. Lower nose gently with the nose wheel pointing straight.

Alternatively, if landing on asphalt is unavoidable, approach normally, with the intent of a zero-speed touch-down directly into wind.

Only if impossible to recover the aircraft from the landing area should it be manoeuvred under its own power, as this could further damage the tyre and wheel rim.

3.19 Failure of CSP/VPP Propeller (if installed)

Noticeable defect:

In case of a noticeable mechanical defect, indicated by sudden vibration or noise, perform a precautionary landing.

Run-away:

Propeller pitch changes without command, usually resulting in unexpected or sudden change in engine RPM and engine manifold pressure.

Run-away to FINE: RPM will increase and propeller pitch will stop in full FINE position. Reduce power if needed, to stay within RPM limits.

Run-away to COARSE: RPM will decrease and MAP will rise until propeller pitch stops in full COARSE position. Reduce power if needed, to stay within MAP limits.

In both cases do not try to re-engage circuit breaker until the cause of the run-away has been determined. Continue according to emergency procedure ‘FREEZE’.

Freeze:

Propeller pitch does not react to pilot input, engine RPM does not change while propeller pitch control is activated. Proceed according to the following table:

Before take off	Do not take-off
During take-off and climb	Try to keep climbing to a safe altitude, return to the airfield and land. If the aircraft does not climb, maintain altitude and to return in a flat curve.
During cruise flight	Depending on the prop position, it should be possible to find a speed and RPM to continue the flight to the next possible landing area. Depending on the prop position your descent will look different and a go around is probably not possible.
During descent	Depending on the prop position (in case of cruise), your descent will look different and a go around will probably not be possible.
During landing	Continue approach as planned. If the prop changes to cruise and the landing looks too long, keep in mind to cut the engine.

3.20 Alternative Method of Engine Shut-down

If the engine continues running after the magnetos have been switched off use one of the following alternative methods:

Close fuel shut-off valve and wait for engine to stop due to fuel starvation.

Alternatively

Engage full choke, wait a few seconds and open the throttle suddenly. This normally chokes the engine and causes it to stop

Alternatively – only ROTAX 914

Turn master switch to off to deactivate both primary and secondary electrical fuel pump. The engine will starve after approximately 30 – 60 seconds.

CONTENTS

INTENTIONALLY LEFT BLANK

SECTION 4 - NORMAL PROCEDURES

This section contains check list items, instructions and procedures for the operation of the gyroplane. However, these procedures do not replace the pilot's appreciation of the individual situation.

4.1 Airspeeds for Safe Operation

Climb ..... 116 km/h (70mph) IAS
Best rate of climb / best endurance ..... 100 km/h (60mph) IAS
Best range ..... 110 km/h (70mph) IAS
Approach ..... 100 km/h (60mph) IAS

4.2 Preparation for Flight

The pilot shall be familiar with the aircraft limitations detailed in SECTION 2 of this manual and shall have performed proper flight planning considering required legal aspects, as well as SECTION 5 'PERFORMANCE' and SECTION 6 'WEIGHT AND BALANCE' of this manual. The use of check lists as provided in this manual is mandatory for a safe operation.

4.3 Daily or Pre-flight Checks

All daily or pre-flight check list items consist of visual checks and do not replace professional mechanical inspection and maintenance. The following check list applies for the standard Cavalon gyroplane.

Note that depending on optional equipment installed the necessary checks may include additional items according to the flight manual supplement provided with the optional equipment. It is advisable for the owner/operator to compile his own check list suitable to his particular configuration.

The pre-flight check is structured into 9 stations which are organized as a clock-wise walk-around to provide a logical flow and sequential order, thus minimizing the risk of left-over or overlooked items.

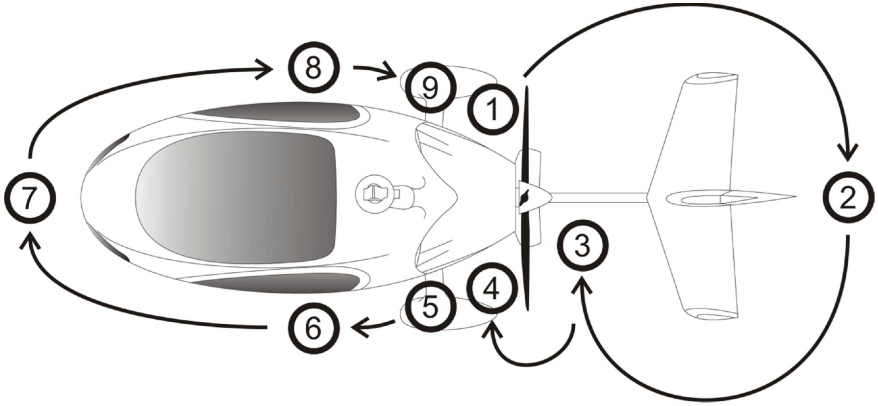

The following checks must be carried out before each flight. However, if the gyroplane is operated by a single pilot or within an organization where the checks are performed by or under the supervision of qualified personnel, check list items marked with a preceding 'Θ' may be carried out daily, before the first flight of the day.

Before exterior check

Θ Fuel tank drain(s)..... Sample
Θ Snow/ ice (if any)..... Removed
Documents ..... Check complete

Exterior check

Station 1 (engine, RH side)
Open upper engine cowling
Θ Before turning prop: MAG switches ..... Check OFF
Θ Engine oil level ..... Check
Θ Dip stick and oil cap..... Installed and secure
Θ Coolant level..... Check
Oil cooler and hoses..... Clean, no leaks, fittings tight
Exhaust system .....No cracks
Lower engine cowling ..... Properly installed, all fasteners locked
External generator .....Secure, V-belt in good condition

Station 2 (stabilizer)
Θ Stabilizer general condition..... Check
Stabilizer attachment ..... Check
Rudder control cable linkage ..... Check
Upper rudder bearing..... Secure, no excessive play
Rotor blades condition and cleanliness..... Check
Blade tips ..... Tight
Aft keel tube protection pad .....No excessive wear

Station 3 (keel tube and propeller)

Θ Forward keel tube protection pad ..... No excessive wear
Propeller condition and cleanliness ..... Check
Propeller leading edge and tips ..... No damage
Spinner (if installed) ..... Tight, no cracks
CSP/VPP propeller (if installed) ..... Check

Station 4 (engine, LH side)

Θ Engine frame rear side / welded joints ..... No cracks, no deformation
Oil cooler and hoses ..... Clean, no leaks, fittings tight
Exhaust system ..... No cracks
Lower engine cowling ..... Properly installed, all fasteners locked
Close upper engine cowling

Station 5 (main gear spring spar, LH)

LH Main wheel tyre ..... Check
Air pressure and slip mark ..... Visual check
Θ Brake, disc attachment (4 bolts) and wheel attachment..... Check
Wheel spat and attachment ..... Check
Θ Main gear spring spar attachment..... Check
Main gear spring spar ..... No cracks
Vibration decoupling element attachment (2x)..... Check
Rotor flight control..... No excessive play and secure
Θ Teeter bolt (bolt end)..... Free to turn
Teeter bolt (nut end) ..... Split pin installed

Station 6 (passenger station, LH side)

Θ LH control stick ..... Secure or removed
Θ Tilting control stick (optional)..... Pins fit tightly, check secure wire

Θ Monocoque structure condition ..... Check
Seat belts..... Secure
Door hinge/s ..... Quick pin installed (or nylocs/safety clips) and secure
Door window ..... Check, no cracks
Static port ..... Clean and open
Θ NAV light (if fitted)..... Check
Θ Strobe light (if fitted) ..... Check

Anti-collision beacon (if fitted) ..... Check

Station 7 (forward fuselage and windshield)

General appearance ..... OK
Pitot cover (if installed) ..... Removed
Pitot tube ..... Clean and open
Rotor lash bag (if sufficient brake pressure) ..... Removed
Windshield condition and cleanliness ..... Check, no cracks
⊙ Nose wheel condition and air pressure ..... Check
⊙ Landing light nose and underbody cleanliness/security ..... Check
Air intake ..... no foreign objects

Station 8 (cabin, RH side)

Static port ..... Clean and open
Rotor brake pressure ..... min. 6 bar
⊙ Throttle lever ..... Check function, full travel
⊙ Brake lever and lock ..... Check function and condition
⊙ Pedals and control cables ..... Check
⊙ RH control stick bolts and nuts (or Quick-pins if fitted) ..... Secured
⊙ Monocoque structure condition ..... Check
Loose objects ..... Removed/secured
Door hinge/s ..... Quick pin installed (or nylocs/safety clips) and secure
Door window ..... Check, no cracks
⊙ NAV light (if fitted) ..... Check
⊙ Strobe light (if fitted) ..... Check
Anti-collision beacon (if fitted) ..... Check

Station 9 (main gear spring spar, RH)

Main wheel tyre ..... Check
Air pressure and slip mark ..... Visual check
⊙ Brake, disc attachment (4 bolts) and wheel attachment ..... Check
Wheel spat and attachment ..... Check
⊙ Main gear spring spar attachment ..... Check
Main gear spring spar ..... No cracks
Cooling air intake ..... No obstructions
Vibration decoupling element attachment (2x) ..... Check
Gimbal head bolts (2x) ..... Split pin installed
Rotor flight control attachments ..... No excessive play and secure
⊙ Main rotor bearing ..... Check condition
⊙ Pre-rotator assembly and brake ..... Check condition
⊙ Teeter bolt (bolt end) ..... Free to turn
Teeter bolt (nut end) ..... Split pin installed
⊙ Teeter stops ..... Check
⊙ Rotor hub and blade clamping area ..... Check
Blade attachment bolts ..... All installed and fastened
⊙ Inner blade caps ..... Tight

CAUTION

Teeter bolt must be free to turn by hand!

4.4 Before Boarding

Fuel level and fuel cap ..... Check

Passenger station:
Passenger ..... Briefed and secure
Loose objects..... Removed
Items in storage compartment..... Secure
Seat belts..... Fastened and tight
Door..... Closed and locked

Rotor brake pressure ..... Check/set BRAKE min. 6 bar
Rotor tie-down bag..... Removed and stowed

Pilot station:
Loose objects..... Removed
Items in storage compartment..... Secure

CAUTION

Never close doors by pulling the door Plexiglas; this can result in breakage of Plexiglas.

WARNING

There is no vertical restraint provided for baggage stowed behind the occupant seats. Normally this baggage is restrained by the vertical tapering of the stowage area. It is the pilots responsibility to ensure any item stowed behind the seats, or anywhere else in the aircraft, is secure. If the stowed items could come free in the event of an accident, then suitable restraints must be fitted – for instance, anchored to the seat belt harness lap belt mounting lugs via a suitable strap.

4.5 Before Starting Engine

Pedals ..... Adjusted and locked
Seat belts..... Fastened
Flight controls ..... Free
Altimeter ..... Set to airfield elevation
Doors..... Check closed and locked

4.6 Starting Engine

Fuel shut off valve ..... Open and guarded
Parking brake ..... Set
Boost (if installed) ..... Deactivated
Cold engine:
Throttle ..... Idle
Choke ..... Fully engaged
Warm engine:
Throttle ..... Idle or slightly cracked
Choke ..... Disengaged
Master switch ..... ON

All engine variants:
Note GEN indicator light ON (and GEN2 where fitted)
Note LOW VOLT flashing briefly

ROTAX 914 engine:
Note BOOST WARN light and BOOST CAUTION light ON for about 2 seconds and buzz of electrical fuel pump.

912ULS Second fuel pump (Pump 2, to prime the fuel system) ..... ON
914UL Second fuel pump (Pump 2)……OFF
The 914UL pump is left OFF to prove the pump fuse and function is correct.

All engine variants: Note (increased) fuel pump buzz when Pump 2 is turned on.

Variable pitch propeller (if installed) ..... FINE
ACL / Strobe (if installed) ..... ON
Both MAG switches ..... ON
Propeller and area ..... "Clear"

Starter (with right hand, left hand on throttle/brake) ..... Engage

Hold starter until engine fires, but for a maximum of 10 seconds. Generally the engine fires immediately. In case of an unsuccessful starting attempt check all preconditions. Wait at least 20 seconds to allow cooling of battery and starter motor before repeated activation.

Oil pressure ..... min. 1.5 bar
Second fuel pump (Pump 2) ..... OFF
Avionics/Radio/Intercom ..... ON
Choke ..... slowly disengage

WARNING

Never attempt to start the engine until the area around the propeller is completely clear of any persons or objects.

4.7 Taxi and Run-up

During taxi do not exceed 15 km/h (10mph) which is approximately jogging speed and steer with careful pedal input. Use wheel brake carefully, if needed, but not before throttle lever has been completely pulled to idle. Control stick should always be maintained in forward centre position. When taxiing on uneven ground, use particular caution and hold control stick so as to avoid the blades or control system hitting their mechanical stops.

Carry out engine run-up in an area with least risk to individuals and other airport ground traffic, preferably headed into the wind. If dark, switch on the nose mounted landing lights.

Warm-up RPM .....2000 – 2500 RPM
Oil temperature and other engine indications ..... within limits

At taxi holding position:
Magneto check (at 4000 RPM).....max. 300 RPM drop
with max. difference between magnetos ..... 115 RPM

Switch ignition/magnetos with right hand while left hand resides on throttle/brake.

Functional check VPP (if installed).....execute (see 9-1.4.3)
Electronic Primary Flight display Observe that gyrocompass matches magnetic compass, and that other indications are normal.
Throttle ..... Idle
Warning and caution indications .....None
Instruments / altimeter .....Cross check
NAV lights and anti-collision lights..... As required
Second fuel pump (Pump 2) .....ON
Doors..... Cross-check closed and locked
Approach and runway .....“Clear”, then line-up

For night flight:
Use nose landing lights to taxi, and under-body landing light for take-off. Anti-collision, navigation and strobe lamps should be used in accordance with night operational requirements. Instrument panel lighting must be on and dimmed to an appropriate level.
Use the pitot heat either before or during flight as required to ensure that the pitot remains clear of ice.
If there is any consideration that the static ports could be blocked, switch from primary (uses the ports either side of the body) to secondary (vents inside the cabin). There is normally negligible difference in level flight between the two ports, as can be seen by switching between the two.

CAUTION

If the canopy is covered in rain drops or fogged up, ensure it is cleared before commencing take-off. Stop and clear the screen if required.

4.8 Take-off Procedure

- Check relative wind
- Maintain control stick in forward position with right hand
- Switch pneumatic mode selector to FLIGHT and return to brake with left hand
- Hold wheel brake without having locking pawl engaged
- While holding wheel brake adjust throttle to give 2000 RPM (1600 RPM red overdr.)
- Activate and hold pre-rotator. To reduce lateral stick force during prerotation, adjust the forward stick position by pulling it slightly aft and to the right
- Let pneumatic clutch fully engage (stabilization at about 110 rotor RPM).
  If necessary release pre-rotator button momentarily and press again to maintain engine RPM within green arc, respectively prevent engine from stalling!
- Carefully increase throttle (~ 20 R-RPM/sec) to 200 R-RPM – max. 220 R-RPM
- When the minimum required rotor rpm is reached, release pre-rotator button
- Gently – but smartly - move control stick fully aft (stick travel ~ 1 sec.).
  In a strong headwind be prepared to stop movement before nose wheel rises!
- Release wheel brake with throttle unchanged
- Monitor rotor speed and progressively increase throttle to take-off power

If Rotorhead III is embodied, then higher pre-rotation speeds are possible and this procedure is amended:

- Check relative wind
- With right hand, maintain control stick in a forward position
- Switch pneumatic mode selector to FLIGHT and return to brake with left hand
- Hold wheel brake without having locking pawl engaged
- While holding wheel brake adjust throttle to give 2000 RPM
- Activate and hold pre-rotator. To reduce lateral stick force during prerotation, adjust the forward stick position by pulling it slightly aft and to the right
- Let pneumatic clutch fully engage (stabilization at about 100 rotor RPM).
  If necessary release pre-rotator button momentarily and press again to maintain engine RPM within green arc, respectively to prevent engine from stalling!
- Carefully increase throttle to increase rotor rpm to that required for the take-off. Minimum rotor rpm for take-off is 200, maximum achievable is 320. Between 280 and 320rpm it is possible that the high engine rpm and resultant propeller static thrust generated may be causing the aircraft to slide with wheels locked – depending on the runway surface and payload. If sliding starts reduce power! If the rpm is not sufficient for take-off, abort and restart as required.
  In case of a slipping clutch (CLUTCH light), reduce power and match engine rpm to rotor rpm.
- When the minimum required rotor rpm is reached, release pre-rotator button
- Gently - but smartly - move control stick fully aft (stick travel ~ 1 sec.), see 4.9
  In a strong headwind be prepared to stop movement as the nose wheel rises!
- Release wheel brake with throttle unchanged
- Monitor rotor speed and progressively increase throttle to take-off power
- In case if a blinking CLUTCH light, consider to abort take-off run

WARNING

Before activating the pre-rotator, check area is clear.

WARNING

Prior to releasing the wheel brake, make sure that the control stick is sufficiently aft. A take-off run with flat rotor system may have fatal consequences.

WARNING

If the rotor speed has decayed to below the green arc, then ground speed must be built-up very carefully to increase rotor speed. Take care! Slow rotors can stall and flap, causing expensive aircraft damage! If in doubt, abort the take-off run and restart.

CAUTION

Do not engage pre-rotator at high engine RPM or drive the rotor to excessive RPM (especially rotorhead II) as this will lead to pre-rotator drive damage.

CAUTION

Avoid overtorqing of the pre-rotator drive! Overtorqing will occur if RPM/power is fed excessively or abruptly. In case of a stalling engine, release pre-rotator button temporarily. Do not yank the throttle control while the clutch is engaged!

NOTE

Perform take-off into the wind and with least possible crosswind component.

NOTE

To avoid unintended engagement in flight the pre-rotator can only be activated with the control stick in its most forward position.

WARNING

In the event of pre-rotator failure, STOP and rectify the fault. Do NOT attempt to pre-spin by hand, as this involves considerable personal risk if the engine is running.

4.9 Take-off Run

- Check engine has reached full power for take-off. Otherwise, abort take-off
- Commencing the take-off run with high rotor rpm (280-320) and the stick fully back means that there is a high starting drag load. The aircraft has to accelerate to approx. 50mph (depending on loading) to take off, and achieve the rotor rpm for the loading conditions.
  Therefore, to minimise the drag and enable maximum acceleration at high rotor rpm, move the stick forwards to approximately the mid position as the aircraft starts to move. Monitor rotor rpm carefully ensuring that it is increasing, if the stick is too far forwards the rotor rpm will decay, and a serious accident can be caused!
- When nose comes up allow nose wheel to float at about 10 – 15 cm above the runway by a balanced change of control stick position
- Minimize lateral drift by applying appropriate lateral control stick input into cross wind direction
- Maintain directional control i.e. runway alignment with sensitive pedal input
- Maintain attitude until speed increases and gyroplane lifts off (at about 50mph, depending on loading and rotor)
- Allow gyroplane to build-up speed in ground effect

CSP/VPP: With a variable pitch propeller installed, refer to the respective flight manual supplement in CHAPTER 9 for correct power setting and handling procedure.

WARNING

Gyroplanes are fully controllable at very low speeds without exhibiting any signs of wing stall or soft flight controls, as it would be perceived in a fixed wing aircraft. However, operation 'behind the power curve' may have fatal consequences during take-off, initial climb or in any other situation within close ground proximity. Always allow aircraft to build-up safe climb speed before allowing it to gain height.

4.10 Climb

- Perform initial climb at safe climb speed and adjust trim
- Set power to maximum take-off power
- Check engine instruments and respect maximum take-off power time limit
- Switch off second fuel pump at safe height
- At safe altitude, the climb may be continued with VY and reduced power setting for noise abatement
- When desired altitude is approached, level gyroplane and reduce power

CSP/VPP: With a variable pitch propeller installed, refer to the respective flight manual supplement in CHAPTER 9 for correct power setting and handling procedure.

If flying at night, switch off the landing lights. Adjust cabin instrument light brightness to suit ambient lighting levels.

4.11 Cruise

- Adjust power setting within the maximum continuous power range
- Adjust trim

CSP/VPP: With a variable pitch propeller installed, refer to the respective flight manual supplement in CHAPTER 9 for correct power setting and handling procedure.

4.12 Descent

- Reduce power setting and lower nose
- Adjust trim

CSP/VPP: With a variable pitch propeller installed, refer to the respective flight manual supplement in CHAPTER 9 for correct power setting and handling procedure.

4.13 Approach

- Switch ON second fuel pump (Pump 2)
- Set variable pitch propeller (if installed) to FINE
- Check all warning and caution indications OFF
- Check all instruments in normal operating range
- Check wheel brake unlocked
- Maintain and trim approach speed
- Control glide angle with engine power
- If at night, turn the landing lights on. Always turn on both landing lamps in case of failure.
- If at night, and it is safe to do so, approach at 70mph. The increase in rotor speed will allow a longer, flatter flare and landing.

CAUTION

The landing light circuit breaker (CB) protects both the nose and under-body lights. Should the CB open, turn off both switches before resetting, and after reset turn on the under-body lamp only. This is the higher current draw, but offers best ground visibility. If the CB opens again, repeat with only the nose mounted lamps. If no landing lights will function, then perform a power on, shallow approach as above into a lit airstrip to enable an immediate go-around if a safe landing is not practical.

WARNING

An approach within the gliding distance to the airport or landing site is generally considered to be the safest option.

4.14 Landing

- Align gyroplane with rudder and correct drift with lateral control input, even if this results in a side slip indication
- Maintain approach speed until approximately 5m (15ft) above runway
- Initiate round out to reduce sink rate and let ground approach
- Perform final flare close to ground as speed will decay rapidly
- Let gyroplane settle on main gear with nose wheel slightly above the ground
- Hold nose wheel closely above ground and let it sit down with pedals neutral at the lowest possible ground speed
- Maintain aft control stick to reduce speed until walking speed. Wheel brake may be used to assist, if needed

CAUTION

Touching down with the nose wheel pointing left or right, and with a run-on speed, will cause the wheel to 'grab' in that direction. If left uncorrected the aircraft will try to turn in that direction, possibly resulting in a roll-over. Always lower the nose at low ground speed, with the nose wheel straight.

CAUTION

When landing in a strong headwind, do not use wheel brake to prevent gyroplane from rollback. In order to compensate for any rollback tendency, flatten rotor disc as required and increase propeller thrust as required.

4.15 Go-around

- Apply take-off power. Counteract yaw tendency and align gyroplane with rudder input
- In horizontal flight, allow gyroplane to gain speed
- Climb with safe or best rate of climb speed and adjust trim

CSP/VPP: With a variable pitch propeller installed, refer to the respective flight manual supplement in CHAPTER 9 for correct power setting and handling procedure.

4.16 After Landing

- Control stick full forward to level-off rotor disc, at latest when rotor speed leaves green arc! Be prepared for reduced rotor drag!
- Use lateral control into wind to maintain rotor disc in level attitude. Adjust lateral control input as rotor speed decays
- Bring pneumatic mode selector to BRAKE position and return to wheel brake with left hand
- Apply rotor brake pressure by using AFT TRIM. Monitor pressure gauge
- Taxi carefully, preferably not above walking speed and mind high centre of gravity when taking turns
- Turn off the underbody landing light when practical to reduce electrical current draw.
- Do not vacate gyroplane until engine and rotor is at a complete stop

WARNING

Mind the spinning rotor and propeller when taxiing close to obstructions or persons. A fast turning rotor or propeller is almost invisible, but contains enough energy to kill a person or cause substantial damage to the aircraft or other structure.

CAUTION

Try to park the blades fore/aft of the aircraft, to avoid high stick loads in roll when taxying. Depress the pre rotator interlock release button & engage the pre-rotator to wind the rotor into the desired position. The use of abrupt pedal inputs to do this during taxiing should be avoided.

NOTE

It is advisable to let the rotor spin down while the gyroplane is at a complete stop. However, in order to vacate the runway, it is possible to taxi while the rotor is spinning down. In this case, be aware of the effects of relative wind on advancing and retreating blade, compensate with lateral control input, and adjust taxi speed carefully as to avoid blade flapping.

4.17 Engine Shut-down

Throttle ..... Idle
Parking brake..... Set
Engine cool-down ..... perform
Turbo charger cool-down at 2000rpm (ROTAX 914 engine)..... min. 2mins
Second fuel pump (Pump 2) ..... OFF
Avionics/Radio/Intercom/Lights (except ACL / Strobe) ..... OFF
Both MAG switches sequentially ..... OFF
ACL / Strobe, navigation and landing lights (if installed)..... OFF
FAN ..... activate if required
Master switch..... OFF and key removed

NOTE

For landing a suitable approach procedure has to be chosen, so the engine cools down sufficiently during descending and later taxiing, as specified by the engine manufacturer. The engine can be shut-off by switching off the ignition; an engine cool-down is not needed.

NOTE

Due to the pusher engine arrangement, a ground engine cool-down is inefficient and may be counter productive. If necessary park into wind so that air is driven naturally into the engine bay air intakes.

NOTE

If the engine is switched off 'hot', for example after an approach with power and short taxi, the engine may refuse to start for the next 15 – 20 minutes.

4.18 Parking

- Install rotor tie-down bag
- Secure gyroplane against rolling using parking brake and chocks, if parked on a slope
- Double check to have master switched OFF and keys removed
- Install protection cover if available or appropriate

NOTE

Avoid long term parking of the aircraft with empty tanks. This will increase the risk of water accumulation in the tanks and will lead to shrinking of the rubber tank seals.

4.19 Special Procedure: Short Field Take-off

A short field take off is conducted in exactly the same manner as a normal take-off, but performed with maximum precision. Therefore, a short field take-off is not so much a procedural thing, but needs practice, experience and mentoring. Apart from environmental aspects such as wind and density altitude, the condition of the gyroplane and its gross weight, the key factors for a short take-off performance are:

- Maximum allowed pre-rotation RPM and no time lost until stick is fully aft (if headwind component allows) and brake is released
- Maximum take-off power is set immediately while stick remains fully aft until nose wheel rises
- Nose wheel held tight above surface and minimum side drift until lift-off
- No over controlling that would result in the nose swinging up and down
- VY climb with no side slip

If Rotorhead III is embodied the procedure is amended to take advantage of higher pre-rotation speed whilst monitoring the "Clutch" warning light

A short field take-off with high pre-rotation speed puts high loads on pre-rotator and rotor and requires a modified procedure. As a consequence, short field take-offs with high pre-rotation shall only be performed after adequate training and only when necessary.

- Perform normal take-off procedure until clutch is fully engaged
- Carefully increase engine power to maximum, which will give up to 320 R-RPM depending the aircraft loading (at light loading the aircraft may slide forwards with the wheel brakes locked)
  In case of a slipping clutch (CLUTCH light), reduce power to match engine to rotor speed
- With the stick moved slightly aft (which will disengage the pre-rotator), release the wheel brake without reducing engine power
- As the aircraft accelerates, move the stick further aft to allow the rotor RPM to increase. Do not let the rpm decrease!
- Allow gyroplane to lift off and gain speed
- V_Y climb with no side slip

4.20 Special Procedure: Slow Speed Sink and Recovery

- Reduce power to idle and let speed decrease by gently using aft control stick
- Maintain enough forward speed for sufficient rudder effectivity
- Rudder will regain effectivity quickly as soon as airspeed or propeller thrust is increased
- To recover, let nose drop slightly below the horizon and build-up air speed while adding power at the same time

4.21 Flight under Conditions of Precipitation

The flight through areas of precipitation can be challenging for pilots. Rain or other precipitation can have a negative effect on flight performance of the gyroplane; flight characteristics can be slightly or in extreme situations drastically affected by rainfall. In particular the following must be expected:

- Reduction in, or loss of sight due to wet and / or misted wind shield or windows
- Failure or faulty operation of avionics and instrumentation (eg water in the pitot tube)
- Pilot disorientation (especially in snow)
- Increased wear and tear of some gyroplane components (mainly of the propeller)
- Change of aircraft aerodynamics (mainly under freezing rain)
- Small reduction in performance due to wet rotors.

Avoidance of precipitation conditions should be taken into consideration during flight planning. Should areas of precipitation be entered despite correct flight planning, react, if necessary, according to chapter 3 “Emergency Procedures”.

WARNING

Precipitation is a risk that can be minimized by proper flight planning. Flight through areas of precipitation should be avoided.

4.22 Flight with Doors Removed

Before flying with removed doors any loose objects must be removed from the cabin or safely stowed.

A possible tail shake tendency can be minimized by using a small side slip. In the case where only one door is removed perform a small side slip into the direction of the closed door (so that the removed door is on the lee-side).

Removal and installation of doors is described in chapter 9-7

NOTE

When flying with doors removed be aware of strong air stream outside the cockpit.

4.23 Engine In-flight Shut-down and Air Restart

The engine should not be stopped in flight deliberately except as part of forced landing training under the supervision of a qualified flight instructor or to drop parachutists. If possible, allow the engine to cool down at 3000 rpm for about 30 sec before turning it off.

Make sure both magnetos are switched back ON and the master switch/starter key has been turned to OFF and back to ON to be prepared for an immediate engine start-up in case the manoeuvre has to be aborted.

NOTE

Be aware of reduced rudder effectivity (and increased drag) with a stationary propeller. Be prepared to use larger pedal input and more left pedal than usual to keep gyroplane aligned.

After a restart, allow engine and oil to warm-up, if possible, before full power is applied.

4.24 Dropping of Parachutists (where market regulations allow)

4.24.1 Personnel Requirements

The pilot must have a valid licence and flight experience of at least 100 hours as well as the aeronautical radio communication licence. Furthermore for dropping of parachutists the pilot has to carry an emergency parachute with him.

The parachutist must have a valid licence and have carried out at least 100 jumps with manual release and at least 12 jumps in the last 12 months.

4.24.2 Technical Requirements

The gyroplane Cavalon can be used to drop parachutists under the following technical conditions:

- Doors or at least the left door must be removed before take-off (see 9-7 Removal/Installation of Doors; opening doors during the flight is not approved).
- 4.22 “Flight with Doors Removed” must be respected at all times.
- The left seat must be locked in the rearmost position respectively by the lower countersunk Allen bolts and the upper telescopic tube (see 7.17 "Seats and Seat Belts").
- Left flight control stick must be removed.
- During the flight the parachutist must be secured by seat belts.
- Before drop speech communication between pilot and parachutist via intercom must be guaranteed at all times (see 7.14 "Intercom”).
- 4.23 “Engine In-flight Shut-down and Air Restart” must be respected at all times.
- Parachutes with automatic release (static line), and parachutes with chest reserve are not approved.

4.24.3 Planning prior to Drop of Parachutists

WARNING

Detailed planning and preparation is essential for the safe execution of the procedure.

The pilot and parachutist must agree on the following points before take-off:

- drop zone
- drop altitude
- drop airspeed
- agreed signals

Furthermore the drop procedure according to 4.24.4 must be practiced and demonstrated before take-off while the engine is not running:

- Taking off the headset, hand over to the pilot and put on helmet
- Opening and stowage of seat belts
- Turning of the parachutist of 90° into exit position
- Leaving the gyroplane (“exit”)

4.24.4 Drop Procedures

WARNING

The parachutist must wait for pilot´s clearance before executing the drop procedure!

NOTE

During the drop the pilot has to expect a slight change regarding mass and centre of gravity of the gyroplane.

After reaching the agreed drop zone and the agreed drop altitude the pilot sets the agreed drop airspeed in a range of **90 – 110 km/h/ (TAS)**.

Following Procedure must be adhered to drop parachutists:

1. Pilot´s clearance for initiating the drop procedure
2. Parachutist takes off the headset and hands over to the pilot
3. Parachutist puts on his helmet
4. Parachutist opens his seat belt and stows it behind the left seat
5. Parachutist turns 90° to the left into exit position, legs are gently guided out the cabin and are hung out of the door
6. Pilot shuts down the engine (see 4.23 ” Engine In-flight Shut-down and Air Restart”)
7. Parachutists leans the upper body forward, until the head protrudes out of the door, parachutist lets the upper body fall forward ("Exit")
8. When the parachutist is clear of the aircraft the pilot restarts engine (see 4.23 ” Engine In-flight Shut-down and Air Restart”) and secures a safe flight attitude
9. Pilot makes sure that the seat belt does not flutter, if necessary seat belt must be buckled and tightened when flying with the left hand seat unoccupied.
10. Pilot makes sure that no objects are caught by the structure of the gyroplane and the flight controls are not affected.

4.25 Noise Abatement

A positive attitude towards residents and environmental-friendly flying supports the reputation and acceptance of aviation in general, and gyroplanes in particular. When compared to other airplanes the noise of a gyroplane is sometimes perceived as unpleasant although it meets the same or sometimes more stringent noise emission requirements. This effect can be attributed to the pusher concept where the propeller is exposed to air flow which was distorted by the fuselage. The degree of distortion, and therefore the noise emission of the propeller, is significantly lower at reduced speeds. The best practices to keep noise level low and general acceptance high are:

- Climb with the speed for best rate of climb V_Y as soon as altitude permits
- Especially in climb keep side slip to a minimum to establish a clean configuration. In addition, this guarantees the best climb performance
- For your own safety always maintain safe altitude and avoid unnecessary 'low-flying'
- When overflying populated areas, look ahead and select the least noise sensitive route
- Repetitive noise is far more irritating than a single occurrence. If you must fly over the same area more than once, vary your flight path
- Avoid blade slap (Wop-wop noise). Blade slap can occur as a result of inadequate piloting technique or during aggressive manoeuvres, but will not appear in normal flight regime

NOTE

Above procedures do not apply where they would conflict with Air Traffic Control, within the traffic pattern, or when, according to pilot's judgement, they would result in an unsafe flight path.

INTENTIONALLY LEFT BLANK

CONTENTS

INTENTIONALLY LEFT BLANK

SECTION 5 - PERFORMANCE

The following data were determined by flight testing and demonstrated with average piloting skills, with engine and aircraft in good condition, as well as clean main rotor and propeller. The parameters apply to standard conditions (15 °C at sea level and standard pressure) and a gross mass of 500 kg.

Note that operation at 560kg MTOW, a higher airfield elevation, increased temperature and low air pressure will have a negative effect on performance.

5.1 Demonstrated Operating Temperature

Satisfactory engine cooling has been demonstrated at outside air temperatures up to 40 °C.

5.2 Airspeed Correction

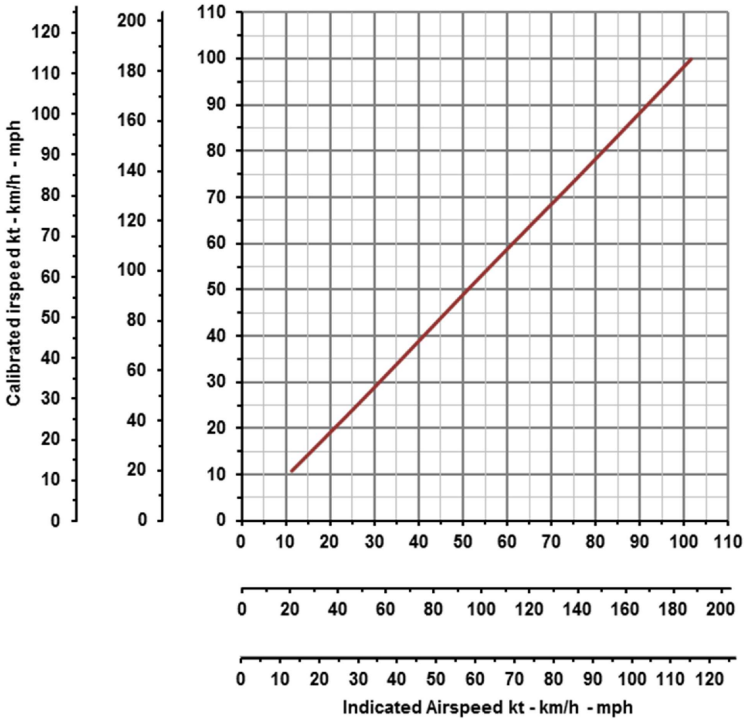

Example: Indicated airspeed of 140 km/h represents a calibrated airspeed (corrected for installation error) of 138 km/h.

5.3 Height-Velocity Diagram

The H/V diagram indicates combinations of height and speed (avoid area left side of the red graph) where a safe landing may not be possible in case of an engine failure. Therefore, operation on the left side of the red line must be avoided.

Take-offs and landings should be conducted according to the recommended flight profile, provided as blue dashed line.

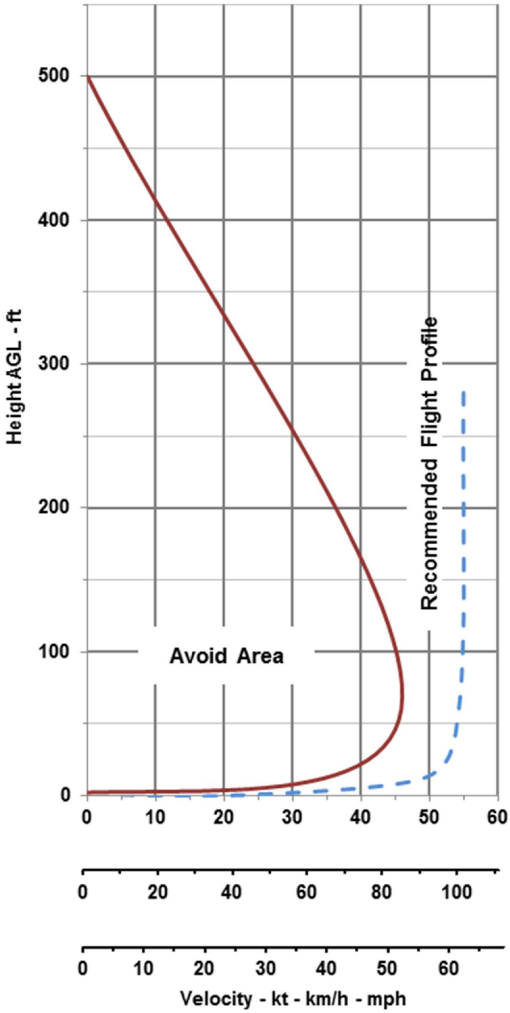

5.4 Speeds

The following speeds are relevant for flight performance. For additional speed limitations refer to SECTION 2 LIMITATIONS of this manual.

Mini horizontal speed (Vmin), TOP (Rotax 914)*, 500Kg...48 km/h (30mph) IAS
Vmin, TOP (Rotax 914)* 560KgTOW.....61 km/h (38mph) IAS
Vmin, TOP (Rotax 914)* 560Kg, IVO prop .....56 km/h (35mph) IAS
Minimum horizontal speed, (Vmin) TOP (Rotax 912) .....56 km/h (35mph) IAS
Speed for best angle of climb V_X.....100 km/h (60mph) IAS
Speed for best rate of climb or maximum endurance V_Y..112 km/h (70mph) IAS
Best range speed.....110 km/h (70mph)IAS
Long range speed** .....120 km/h (75mph) IAS
Approach speed***.....100 km/h (60mph) IAS
Vmc power-off**** .....32 km/h (20mph) IAS
Vmc power on**** .....0 km/h (00mph) IAS

* Take care! A full power operation at Vmin with a Rotax 914UL will result in a very high nose-up attitude with little forward visibility.

** Long range speed is the speed faster than the best range speed which results in a slightly lesser range but represents a good compromise between range and saved air time.

*** Approach speed above 60mph builds energy in the rotor that results in a long floating landing. Approach speed at 50mph results in a very short landing roll, and below 50mph requires increasing skill especially at maxTOW.

****Vmc is the minimum controllability speed. At 20mph or below, engine off, rudder authority reduces, to negligible below 10mph.

TOP is Take Off Power.

5.5 Rate of Climb[2]

Rate of climb, 500 kg, V_Y, TOP, 914UL..... 3.8 m/s (750fpm)
Rate of climb, 560 kg, V_Y, TOP, 914UL..... 2.8 m/s (550fpm)
Rate of climb, 500 kg, V_Y, TOP, 912ULS..... 2.5 m/s (500fpm)

5.6 Take-off and Landing Data

Take-offs and landings have been demonstrated up to a crosswind component of 36 km/h (22mph).

The following data is valid for operation at a gross mass of 500 kg at an even air strip with short grass, no wind, and pre-rotation to 220 RPM. Take-off and landing distances account for a 15 m obstacle.

Take-off roll* ..... 140 – 220 m

[2] Rate of Climb values were identified within noise measurement according to German regulations and may differ from the listed values depending on engine and propeller type.

Take-off distance, 914 UL HTC prop.....405 m
Take-off distance, 914 UL IVO.....405 m
Take-off distance, 912 ULS HTC prop .....550 m

* Take-off roll and take-off distance will be shorter using the boost regime of the ROTAX 914 engine

As an additional information the following data is valid for operation of a Cavalon equipped with an ROTAX 914 UL engine, at a gross mass of 560 kg at an even air strip with short grass,, and pre-rotation to 200 RPM. Take-off distances are to clear a 15 m obstacle

Take-off roll .....160 – 250 m
Take-off distance, 914 UL HTC prop.....780 m
Take-off distance, 914 UL IVO.....590 m

These distances depend on the aircraft take-off weight and environmental conditions. Reduced weight reduces take-off distance, and the environmental effects are shown in the 2.2 paragraph. Wet grass or boggy conditions will significantly increase these distances

Landing roll.....0 – 20 m
Landing distance .....150 m

5.7 Influence on Take-off Distance and Climb Rate

All flight performance figures presented in this chapter are based on standard atmospheric conditions in sea level. Depending on actual temperature and pressure altitude (elevation) factors on take-off distance and climb rate can be deducted from the following chart.

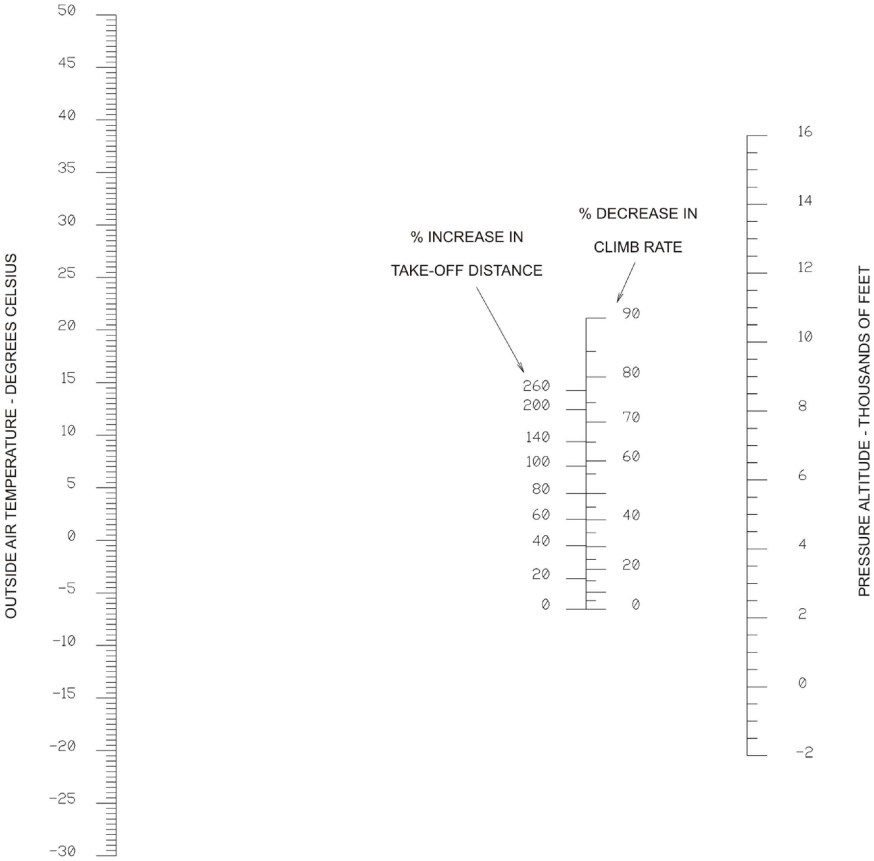

See next page for example.

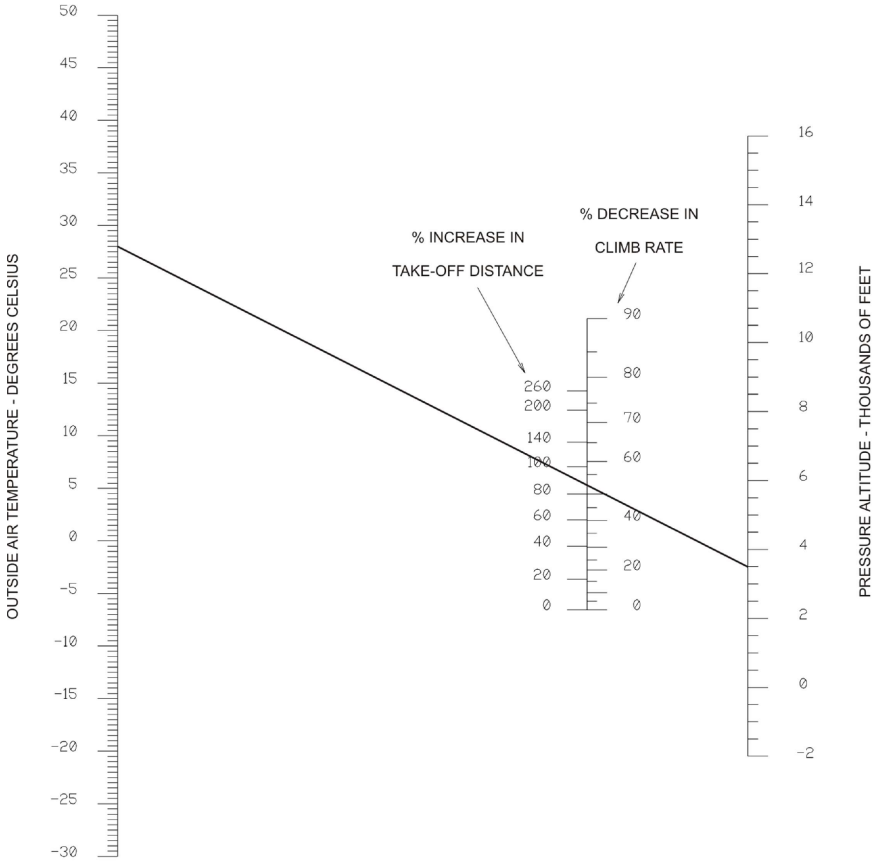

Example:
Given: Outside Air Temperature 28 °C and Pressure Altitude 3500 ft
Result: 88 % increase in take-off distance and climb rate reduced by 53 %

5.8 Sink Rate and Glide Ratio

The sink rate depending on airspeed with the engine in idle is plotted in the following diagram:

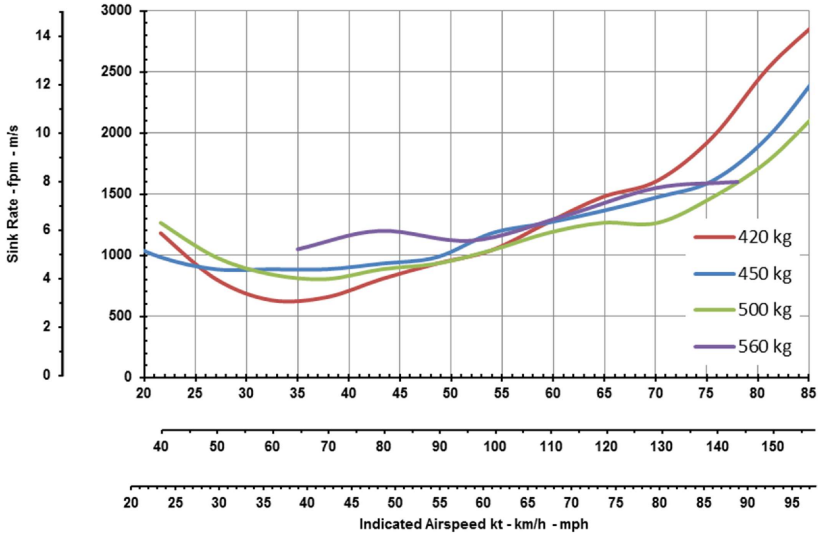

In case of an engine failure, expect a glide ratio of 1:3 which corresponds to a vertical distance of 900 m or 0.5 nautical miles for each 1000 ft.

5.9 Additional Performance Data

5.9.1 Fuel Flow

The following fuel flow figures are provided as estimates and do not constitute certified performance. Exact fuel flow will vary with environmental conditions, cleanliness of propeller and rotor, piloting technique (minimum side slip), and power setting. For additional procedures about proper power setting consult SECTION 9 for supplemental data concerning the variable pitch propeller, if installed.

Fuel flow at 125 km/h (78mph) IAS ..... 15 ltr/h
Fuel flow at 140 km/h (87mph) IAS ..... 18 ltr/h

5.9.2 Service Ceiling

See SECTION 2 LIMITATIONS

5.10 Sound Exposure Level / Noise Characteristics

The noise certificate was granted according to the German requirements for noise protection for microlight gyroplanes ("Lärmschutzverordnung für Ultraleichte Tragschrauber") stating an overfly noise of 68 dB or less.

5.11 High Altitude Operation

The reducing air density climbing to this altitude means that the engine will be prone to over revving. Throttle back, or increase propeller pitch (where a variable pitch propeller is fitted).

Rotor rpm will rise by approximately 90rpm. This will increase disc inertia, and may effect the rotor vibration. The rpm will easily rise above this value at Vne or in turns. Ensure the rpm remains within gauge limits.

Engine oil or coolant systems may be compromised by the lack of air density to remove the heat. Ensure T's and P's remain within limits.

Ensure the aircraft remains within the handbook operating temperature limits; ISA standard is approx. -13degC, the aircraft is approved to -20degC.

Ensure occupants are properly equipped for operation at this altitude – especially for the low temperature, and for the lack of oxygen.

CONTENTS

INTENTIONALLY LEFT BLANK

SECTION 6 - WEIGHT AND BALANCE

6.1 General

The gyroplane must be operated within the weight and balance limits as specified in SECTION 2 of this manual. Loading situations outside these limits can result in restricted flight control and can ultimately lead to degraded safety.

6.2 Weight and Balance Record

An initial weighing report and equipment list showing gyroplane configuration, empty weight and centre of gravity is delivered with each gyroplane. This data applies to the gyroplane as delivered from the factory. Any changes in the configuration should be performed by a qualified maintenance station and documented. After modifications and at regular intervals a new weighing report and equipment list should be issued.

6.3 Compliance with Weight and Balance

The Cavalon gyroplane is designed in such way that compliance with weight and balance is provided, if

- the gyroplane is loaded within the individual weight limitations for each station as provided in SECTION 2 of this manual, and
- the maximum allowable cockpit loading (both seats and baggage) is respected, and
- the certified maximum take-off weight, representing the total sum of pilot, passenger, baggage, fuel and current empty weight is not exceeded

6.4 Lateral Centre of Gravity

The above requirements in conjunction with 2.7.1 also cover asymmetric lateral load cases. Even with most asymmetric lateral cockpit loading (pilot station loaded with maximum weight while LH station is unoccupied), sufficient control margin and lateral CG within limits has been demonstrated.

However, the resulting cabin attitude in combination with the unusual optical sensation may lead to misinterpretation of flight attitude, height above ground and runway alignment.

Therefore, first solo flights should be performed with adequate ballast on the empty LH seat in order to compensate asymmetric lateral loading. Ballast should be gradually reduced with gained experience.

CAUTION

Ballast must be properly secured and weight and balance must be respected.

INTENTIONALLY LEFT BLANK

CONTENTS

INTENTIONALLY LEFT BLANK

SECTION 7 - SYSTEM DESCRIPTION

7.1 Introduction

This section contains the description of the gyroplane and its standard systems and equipment. Optional equipment is described in Chapter 9 of this manual.

7.2 Airframe and Undercarriage

The load carrying structure of the gyroplane consists of a composite monocoque occupant enclosure which is connected to the rotor tower and keel tube. The composite structure, tower and aft extension carry all loads induced by the crew stations, engine, rotor, undercarriage, stabilizer, and serves as installation platform for additional equipment.

Stabilizer structure with rudder is made of CRP and is bolted to the aft extension of the keel tube. Attachment points for the engine installation are provided by a steel tube ring mount at the rear of the firewall.

The landing gear consists of a steerable nose wheel in a steel fork and two main wheels with hydraulic brake system. Both main wheels can be equipped with wheel spats made from GRP and are mounted to the ends of the spring spar, which is made from GRP. The spar is designed to absorb even higher than normal landing loads in case of a hard landing or crash.

7.3 Doors, Windows and Exits

This gyroplane features one large undivided glazed canopy and two hinged doors with locking mechanism at the left hand and right hand side. The locking mechanism can be operated from the inside and outside by moving an aluminium locking lever. The door is properly locked when the lever jumps sidewise into its locking detent.

Two versions of the door lock are installed.

Body series I has two pins per door that slide into holes in the body, operated by the door lever

Body series II has a slam-shut door system utilising spring loaded catches.

Two adjustable fresh air vents one on each side and one sliding window per side with pivoting vent are provided for ventilation. The sliding window can be used as viewing hatch in case of emergencies and is wide enough to reach through with a hand.

The gyroplane is embarked and disembarked from each side while the doors are held open by a gas spring. In case of emergency the opposite door may have to be used to disembark the aircraft.

In order to close the door, pull the door close, move/lead the locking lever from ‘Open’ (aft position) to ‘Close’ (forward position) and let the lever snap sidewise into its locking detent. Do not close doors by pulling at the opened sliding window as this may result in breakage of the Plexiglas. Only use the grip or recess provided for that purpose and operate locking lever with second hand while pulling door close.

For slam shut doors, simply smartly close the door using the pull handle.

7.4 Fuel System

The fuel system consists of two tanks permanently connected with a large bore crossover tube allowing them to be considered as one large tank, with a single filler port, fuel and ventilation lines, fuel level indicator, and water drain point. The filler port is located at the left hand side of the gyroplane. In order to open the filler cap, lift, then turn the flap, and pull out. Reverse to close cap. In some markets the cap is retained to the aircraft via a security cable.

Drain Valve

The tanks are installed behind the seats and have a capacity of 100 litres. Fuel level can be checked visually using a dip stick which has to be inserted diagonally from the fuel filler port (see 8.5).

The tanks are ventilated by a ventilation line above the tanks leading through the mid channel directly to the outside, and a vent hole in the filler cap to prevent changes in pressure or temperature pushing excess fuel through the vent pipe. Alternatively, later aircraft are vented between the tanks in the mid channel, and via a single vent from the tank filler neck to the outside. This later system does not require the filler cap vent.

As an option, a low fuel level sensor may be installed in the left tank (required for UK and USA Primary category). The LOW FUEL warning light is triggered as soon as 5 litres or less of useable fuel remain in the tank.

The fuel system versions differ with engine model, see schematics below.

Fuel system ROTAX 912:

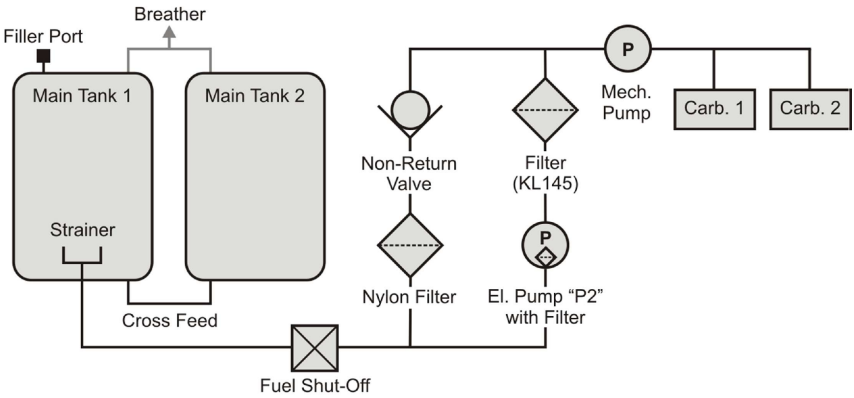

Later models are fitted with a nylon mesh filter before the electrical fuel pump, and a non-return valve after.

Fuel system ROTAX 914:

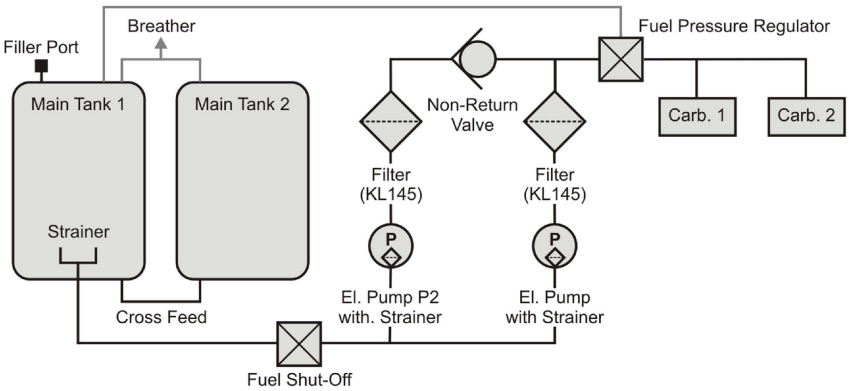

Later models are fitted with a nylon mesh filter before each fuel pump, and a non-return valve after.

7.5 Pneumatic System

Aircraft trim, rotor brake and activation of the pre-rotator is controlled by a pneumatic system, consisting of an electrically driven air compressor with filter/dryer, a pressure gauge in the cockpit, solenoid valves, air lines, pneumatic actuators, and the respective cockpit controls.

Trim function

Trimming is affected by varying trim pressure in the pneumatic trim actuator which is installed in parallel with the rotor head tilt for pitch control. Aft or nose-up trimming activates the electrical compressor and increases trim pressure, causing the actuator to retract, and tilting the rotor disc aft. Forward trimming opens a pneumatic valve to reduce trim pressure and allows the rotor disc to flatten, due to the spindle head offset and the gyroplane's weight. The actual trim condition is indicated on the trim/brake pressure gauge in the centre panel of the cockpit.

Lateral/roll trim works accordingly, using a lateral pneumatic trim cylinder. Lateral trim condition is indicated by a LED bar on the instrument panel.

Rotor brake

With the pneumatic mode selector in BRAKE position the operation of the pneumatic trim actuator is reversed so that increased pressure causes the actuator to push the rotor head up (or level) and presses a brake pad against the rotor head disc. In order to increase brake pressure, move the 4-way trim switch on the stick grip to aft. Note that this action will also push the control stick forward. At full brake pressure the control stick will be maintained in its full forward position.

Activation of the pre-rotator

The pre-rotator is activated as long as the respective switch on the control stick head is depressed provided the following pre-conditions are met:

- pneumatic mode selector set to FLIGHT
- control stick in full forward position
- trim pressure less than 3 bar

When activated the pneumatic clutch is activated and engine torque is transmitted through a 90° gearbox and drive to the pinion which is engaged by another small pneumatic actuator into the geared ring of the rotor head. The drive pinion is sliding on a helical gear to provide automatic lock-out in case of rotor RPM overrun. The pre rotator drives shafts feature sliding splined elements to accommodate drive shafts length changes due to rotor head and engine operational movement..

Activation of the pre-rotator in BRAKE position

The pre-rotator can be activated in BRAKE position to park the rotor blades fore-aft for taxi. To do so, the pre-rotator switch and the overdrive/override switch in the cockpit panel have to be pressed simultaneously. Avoid prolonged activation of the pre-rotator with rotor brake engaged.

7.6 Power Plant

Engine

There are two engine variants available, being the ROTAX 912 ULS normally aspirated reciprocating engine and the ROTAX 914 UL turbo charged version. Both engine types are 4 cylinder, horizontally opposed, 4 stroke engines featuring

- Liquid cooled cylinder heads
- Ram air cooled cylinders
- Dry sump forced lubrication
- Dual breakerless capacitor discharge ignition
- 2 constant depression carburettors
- Hydraulic tappets
- Electric starter
- Generator (Alternator)
- Reduction gearbox with integrated shock absorber and overload clutch

The ROTAX 912 ULS engine provides a maximum take-off power of 100 horse power while the turbo charged version offers a maximum take-off power of 115 horse power. For technical details refer to the engine manufacturer's manual.

Oil system

The oil reservoir with dipstick is accessed through a cover on the left hand side of the fuselage. The cover is held by 3 cam lock fasteners which can be locked or unlocked by a quarter turn. The type of lubrication system requires a special procedure for accurate oil level checking and to prevent overfilling, which is described in SECTION 8 of this manual.

Engine cooling

Engine cooling is provided by ram air cooled cylinders and liquid cooled cylinder heads. Therefore, cylinder head temperature (CHT) or coolant temperature (CT) indication (depends on cylinder head design) is provided in the cockpit. Sufficient cooling air flow is provided by a ram air duct. The water cooling system comprises of engine driven pump, radiator with thermo-activated electrical blower fan, expansion tank with radiator cap, overflow bottle, and hoses.

A single, large area radiator is mounted above the engine so that cooling air from the ram air duct passes through the cooler, is directed around the engine's cylinders, and finally escapes through an opening at the lower rear end of the engine cowling. Force cooling is ensured by an electrically driven ducted fan controlled by a thermo switch. A push button in the cockpit allows manual activation temporarily which is typically used to avoid possible heat build-up after shut-down.

Two versions of engine cowling are fitted. The later type has improved ducting for better cooling.

In order to support natural heat circulation (chimney effect) with the early cowlings fitted, the blower fan reverses in ground mode to allow the hot air escape at the ram air opening in the forward mast cover. Ground mode is detected when the engine is off. This is an optional fitment.

For the relevant checking and replenishing procedures, refer to SECTION 8 of this manual and also the engine manufacturer's manual.

7.7 Propeller

A three-bladed, fixed pitch propeller with aluminium hub is used as standard version. The propeller blades are made from CRP composite material with a foam core. As an option a variable pitch propeller is available which is described in SECTION 9 of this manual.

7.8 Rotor System

The two-bladed, semi-rigid, teetering rotor system comprises high-strength aluminium extruded rotor blades, a hub bar, and a common teeter hinge assembly.

The rotor blades feature an aerodynamic profile especially suitable for rotorcraft which, in combination with its relative centre of gravity, provides aerodynamic stability by eliminating negative blade pitching moments and flutter tendency. The hollow blade profile is closed at both ends by plastic blade caps.

The aluminium rotor hub bar is pre-coned to the natural coning angle of the blades and connects the blades firmly to each side using 6 fitting bolts and a clamping profile. In order to compensate for asymmetric air flow in forward flight the blades are free to teeter. The hinge assembly consists of teeter tower, teeter bolt and teeter block.

The teeter bolt runs in a long Teflon coated bushing in the teeter block (main bearing action), as well as two shorter bushings in the teeter tower (emergency bearing action). The main bearing action is supported by special grease which is applied through a grease nipple on top of the teeter block. Servicing is described in SECTION 8 of this manual.

7.9 Vibration Damping

A certain level of vibration is inherent to any 2-bladed rotor system. In order to reduce vibration levels to a minimum, a vibration decoupling element in the rotor mast isolates rotor vibration from the fuselage.

7.10 Flight Controls

Rotor head and trim control

Pitch and roll of the gyroplane are controlled by tilting the complete rotor head by means of the control stick. Control input is transferred via torsion tube and linkage running below the seats to the base link and from there to the rotor head via push-pull control cables.

The control stick head is ergonomically shaped to fit the pilot's right hand and features control buttons for radio transmission (1), a four-way trim function (2), and activation of the pre-rotator (3).

The trim control works as a classical 4-way beep switch. Pulling the beep switch back increases aft trim or nose-up tendency, while pushing the switch forward reduces back trim pressure, leading to a nose-down tendency. Roll trim is affected by

Control stick head

1 – Radio transmission
2 – Trim switch
3 – Pre-rotator

pushing the trim switch to the respective side.

Because of a safety circuit, activation of the pre-rotator is only possible with the pneumatic mode selector in FLIGHT position and the control stick fully forward. This prevents inadvertent activation of the pre-rotator during flight or in BRAKE mode.

The LH flight controls must never be restricted by passenger or objects. Passengers must be briefed.

Rudder and front wheel control

The rudder is connected to adjustable foot pedals with steel cables which are routed through the lower fuselage and inside the keel tube. Both pairs of pedals are interconnected. The nose wheel steering is directly linked to pedal/rudder control input by redirected cables.

Both pairs of pedals can be adjusted to suit different leg lengths. A shorter adjustment is achieved by pulling the handle which moves the pedals closer. Pulling the handle while pushing with both feet gently against the pedals allows longer adjustment.

After adjustment make sure the pedal assembly is properly locked, as indicated by a definite and positive click.

Pedals (left hand side shown) with adjustment possibility

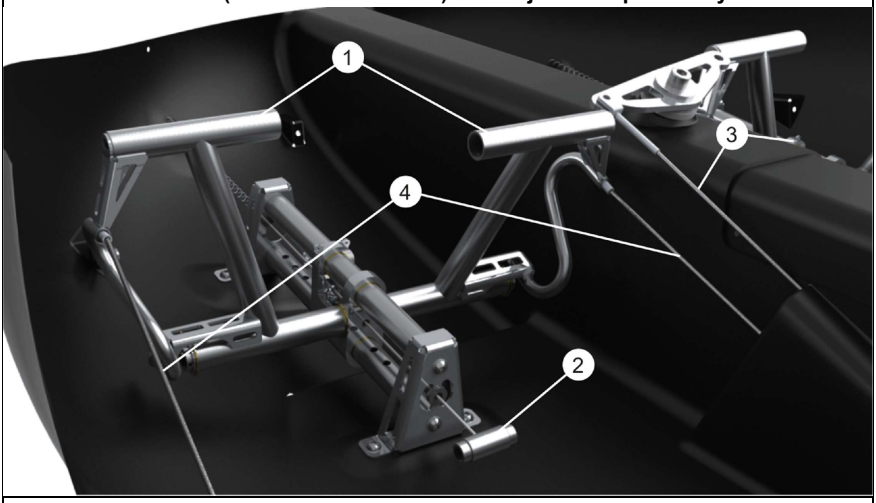

1 – Pedals	3 – Nose wheel steering cables
2 – Adjustment handle	4 – Pedal control cable

The rudder is fitted with a trim tab.

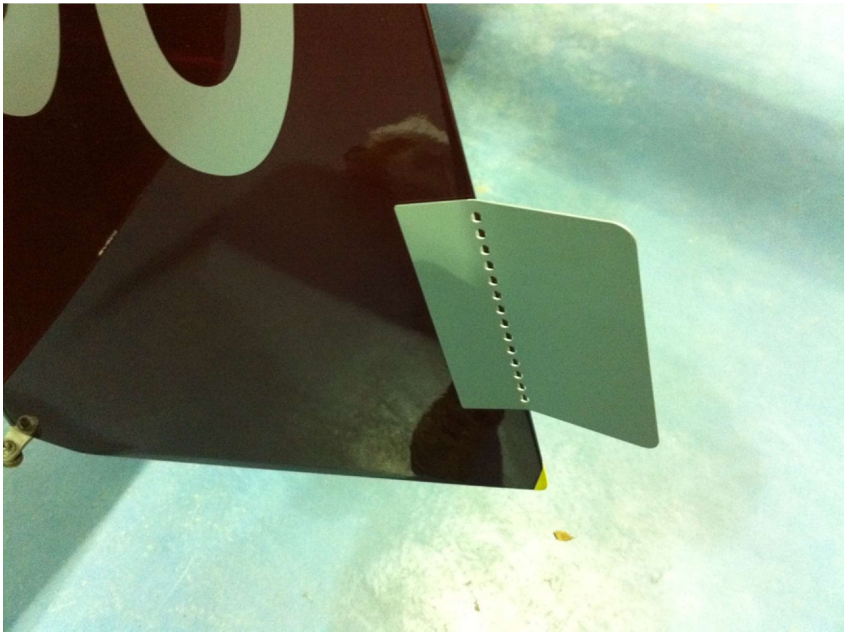

This is normally biased to the left, and may be adjusted by the operator to trim the aircraft for straight flight at a desired speed, feet off the pedals. Adjusting it to the left will biase the rudder to the right and vice versa.

Throttle and brake panel

The throttle and brake panel with choke and cabin heat / cabin temp control is located on the left side of the pilot station in the centre panel. Throttle control (1) is conventional with IDLE in aft (or pulled) and full throttle in most forward position. With the ROTAX 914 UL engine the boost range is entered by overcoming a small resistance to the front. The throttle lever is linked with cable controls to the carburettors. A mechanical spring applies tension to the control cables and brings the carburettors to full throttle in case of a cable break. The throttle lever has a pre-set friction brake which holds the throttle in the selected position.

Choke (3) is used start a cold engine. In order to do so, pull the choke lever fully to the rear or ON position and be sure to have the throttle in idle position. After starting the engine and a short warm-up, the choke can be slowly disengaged by moving the lever into its forward or OFF position.

Throttle and brake panel

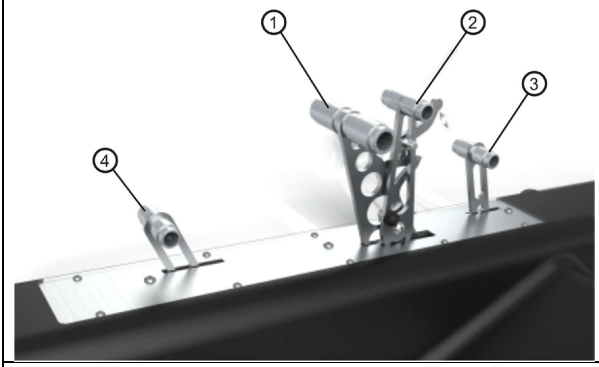

1 – Throttle lever
2 – Brake lever with locking pawl
3 – Choke control
4 – Cabin heating / Cabin temp (if installed)

The hydraulic wheel brake is actuated by pulling the brake lever (2). A locking pawl mechanism allows setting for use as parking brake. In order to release the parking brake pull the brake lever a little further to let the spring-loaded locking pawl disengage, and then release wheel brake.

Do not try to disengage the locking pawl by pressing the small release lever without pulling the brake lever at the same time. Releasing the pawl using the small release lever only will lead to premature deterioration of the teeth. If the teeth are worn the function of the parking brake will be compromised!

The quadrant also features the control for cabin heating / air conditioning system (4). All controls are labelled correspondingly by engraved text and symbols on the cover plate.

7.11 Electrical System

The 12V DC electrical system consists of an engine driven electrical generator, a battery, master switch, indicators, switches, electrical consumers, and cabling. With the ROTAX 914 UL engine an electrical power supply is vital for continued engine operation as this engine variant solely relies on electrically driven fuel pumps.

An additional, externally mounted 40A generator (Gen2) is fitted to Cavalon gyroplanes equipped for Night-VFR operation.

Turning the master switch to the ON position closes the battery contact and energizes the gyroplane’s electrical system. The red LOW VOLT warning light will illuminate briefly as a functional check. A steady indication, however, warns the pilot that the voltage of the system has dropped below a safe value. In this case a safety circuit (load shedding relay) will automatically disable the aircraft lights and the 12V power receptacle.

Orange GEN and Gen2 warning lights are installed to indicate that the battery is not being charged by that generator.

Turning the keyswitch on (if fitted with a 914UL engine) will also energise the regulator relay, and provide electrical energy from the battery to the primary electrical fuel pump. This relay is to protect the engine fuel supply in the event of a cabin primary fuse failure, or a battery short circuit, enabling engine fuel supply to continue in those circumstances.

Seat heating note. The optional seat heat is actuated by depressing the rocker switch between the seats to either (I) or (II) heat setting (with the switch centred for OFF). The heater element is self regulating to that setting. The seat heating requires considerable energy, and is recommended to be left OFF (or at least reduced to heat setting (I)), once the cabin heater and cabin is up to temperature (around 5 minutes).

Note that the seat heating elements will only work when the LOW VOLT warning LED is OFF, being automatically disconnected when the voltage falls below the LOW VOLT relay threshold

Warning! High electrical load in flight with low engine rpm may reduce the ability of the charging circuit to replenish the battery, thereby reducing the battery reserve in the event of a charging circuit failure. Illumination of the LOW VOLT warning lamp lights demonstrates that the electrical system voltage has dropped below 12v, and, provided the charging circuit is working, that the electrical demand has exceeded supply. If lit, or intermittently lit, either reduce the electrical load or increase generator circuit output by increasing the engine rpm, as safe or appropriate to do, such that the lamp remains off.'

The power consumption of individual equipment is listed in the following table:

Equipment / System	Power load
Internal generator (Gen)	*(-) 240 W*
External generator (Gen2)	*(-) 600W*
Electrical fuel pump P1	21 W
Electrical fuel pump P2	21 W
Pneumatic compressor	124 W (peak) / 103 W
Engine cooling fan	194 W (peak) / 97 W
Cabin heat blower fan	32 W
Heated seats	148W (peak)
Nav/Strobe lights (LED)	102 W (peak) / 34 W
Anti-collison lights (Option)	100W (peak) / 20W
Nose (taxi/landing) lights (LED)	10 W
Underbody landing light	113 W
Pitot tube heater	19W
Radio ATR833	7 W (rcv) / 35 W (xmt)
ATC Transponder TRT800H	max. 10 W
Aspen EFD1000 PFD (has an independent 30min battery reserve)	65 W
iPad (used as GPS)	35 W
Instrument lighting	25 W
Cabin light	1.5 W
Clock	1.4 W
12V Accessory socket	Max 67 W
Optional Pneumatics box heater pads (automatically on if box temperature below -10degC)	max 20 W

7.12 Lighting System

All Cavalon aircraft are approved for Day-VFR operation. Those equipped with the necessary additional equipment are approved for Day-VFR and Night-VFR. Refer to SECTION 9 of this manual for description of External lighting)

7.12.1 Instrument panel lighting.

The instruments are lit as follows;

- ‘ROAD’ gauges (CHT/coolant, oil pressure, oil temp, fuel pressure, rotor rpm and fuel level) are lit from within.
- The altimeter and ASI are lit with ‘nulite’ units fitted between the gauge and the instrument panel.
- Two short pedestal lights illuminate the lower centre panel.
- One flexible stalk mounted pedestal light illuminates the right CB and switch panel.
- The optional clock is self illuminated, with auto-dimming of LEDs.

- The radio and compass are self lit, with no dimming function.
- The card compass is lit from the units top mounted bulb.
- Most indicator LEDs self-dim when the panel lights are switched on.
- A row of side-light emitting diodes illuminates the centre panel.
- The dimmer rheostat is mounted on the left panel.

Note! The Aspen EFD1000 PFD (Primary Flight Display) (or VFR version) is a certified device with EASA approval IM.210.1D094555 rev A (and also carries FAA and ETSO approvals). It may only be installed and maintained in line with the Aspen manual 900-00014-001. Refer to this manual for all aspects of use.

The RSM (Remote Sensing Module) for the PFD is located underneath the aircraft body.

7.13 Electrical circuit protection

Fuse description	Rating	Protects	Fuse type	Location
Main incoming supply to cockpit	40A	Main positive supply is fed to the starter solenoid from the battery. The supply continues then through the 40amp fuse to the cabin.	Bolt in strip type, MTA S.p.A. “Midival” range 40A rating	Engine bay fuse box, left side within inner firewall
Compressor	10A	Only supplies the pneumatic compressor	CB	Inst. Panel
Regulator relay (Gen1)	2A	Regulator Relay circuit	CB	Inst. Panel
Gen2	2A	Aux generator	CB	Inst. Panel
Primary fuel pump (914UL engine variant only)	5A	Fuel pump P1	Blade fuse	Near fuel pump in pump harness
Secondary fuel pump	5A	Fuel pump P2	CB	Inst. Panel
914UL TCU	2A	Engine control unit	CB	Inst. Panel
Cockpit	5A	All electrical gauges (rotor and engine rpm, oil pressure, water and oil temps, fuel gauge) and warning lamps	CB	Inst. panel
Radio	5A	Radio (transceiver)	CB	Inst. panel
Transponder	5A	Transponder	CB	Inst. panel
EFIS	10A	Aspen PFD VFR or other display	CB	Inst. panel
Alt/Aux	5A	Accessory instruments (e.g.	CB	Inst. panel

		Attitude Indicator)		
GPS	5A	GPS or iPad with navigation software	CB	Inst. panel
Pitot	2A	Pitot heat	CB	Inst. panel
Flarm (where fitted – not applicable to UK aircraft)	1A	Flarm anti-collision system	CB	Inst. panel
Lights (Day-VFR variant)	5A	Landing lights	CB	Inst. panel
Lights (Night-VFR variant)	16A	Landing lights	CB	Inst. panel
ACL	5A	Nav and Strobe lights	CB	Inst. panel
Start	5A	Starter relay and SMD module	CB	Inst. panel
Variable pitch propeller (where fitted)	16A	Pop out circuit breaker for propeller and propeller controller.	CB	Inst. panel
Fan	10A	Power supply to engine cooling fan	CB	Inst. panel
Trim	2A	Supplies power to the stick controls for operating the pneumatic solenoid valves and the compressor relay	CB	Inst. panel
12v plug	5A	Accessory socket	CB	Inst.panel
Heat	16A	Electric seat heating	CB	Inst panel
Rotax regulator	25A or 30A	Charging circuit from regulator to battery/aircraft supply. 25A is used in the UK market.	MTA S.p.A. “Midival” range 25A or 30A rating	Engine bay fuse box, left side within inner firewall
Starter	100A	Primary supply from battery to starter-solenoid /starter and from starter solenoid to main fuse	MTA S.p.A. “Midival” range 100A rating	Engine bay fuse box, left side within inner firewall
External battery charge point (where fitted)	15A	Protects cable from short circuit when fitting or removing the cowls	Cartridge fuse	Line-fuse near battery
Heater	5A	Cabin heating fan located in nose of aircraft	Cartridge fuse	Line-fuse in centre-console powered from “Heat” CB

Note that the external charging point permits charging via a Ctek charger

CAUTION

Do not reset CB's in flight unless essential for continued safe flight

7.14 Avionics

Radio.
Option fit is the Funkwerk ATR833, MkI approval no EASA.21O.0193, MkII approval number EASA.210.10062108 for both external and internal communications. The wiring harness terminates in a standard jack plug type connection at each seat, and the antenna may be mounted inside the nose, or underneath the enclosure. Ensure the headsets chosen function correctly before flight, and refer to the radio's User Manual.
The radio EASA approval numbers are, MkI approval no EASA.21O.0193, MkII approval number EASA.210.10062108.

Transponder.
Option fit is a Funkwerk TRT800H Mode S transponder. The antenna protrudes under the body. Read the User Manual for operational instructions, and take care that the Mode S hexadecimal code and aircraft recognition data is correct!
The Funkwerk TRT 800H carries an EASA approval, approval no. EASA.210.269
Others may be fitted subject to local approval.

Remark; Depending on the market, a Radio Operators licence may be required to allow use of the radio, and a Radio Installation licence may be required for the radio and transponder (eg one combined licence, renewed annually).

7.15 Instrument Panel

Different instrument panel layouts are available. The basic instrumentation arrangements include:

- Standard Layout / Moving Map Portrait
- USA Primary Category and Section T approved display, day VFR
- USA Primary Category and Section T approved display, day and night VFR
- Glass Cockpit - Single Display
- Glass Cockpit - Dual Display

The standard layout includes all instruments necessary for flight but also installation provisions for additional conventional instrumentation.

The panel layouts Moving Map Landscape or Portrait include all relevant instruments arranged in a way to accept most off-the-shelf moving map navigation devices in the respective format. For detailed user information and instructions concerning the different moving map systems please refer to the manufacturer's documentation.

NOTE

Any moving map system shall be used for reference only and does not replace proper flight planning and constant oversight and awareness.

WARNING

All GPS and/or EFIS display units requires regular updating of the displays and potentially, the basic software itself It is the operators responsibility to ensure the equipment is correctly updated prior to flight, and to understand that the GPS system is NOT a primary navigational aid. The GPS system (or any other information displayed on the device) has not been approved to any airworthiness standard.

The Glass Cockpit layout is tailored to the integrated flight and navigation suite of the DYNON AVIONICS SkyView or Garmin G3X. In addition to navigational and moving map functions, the system provides primary flight data and relevant engine/vehicle monitoring. It is of utmost importance to read and understand the operator's manual and to become familiar with the system before operation. In case of a system failure, an altimeter, air speed indicator and compass are provided as back-up instrumentation.

Depending on the chosen instrumentation and optional equipment, the depicted panels on the following pages may vary. Note that the standard or back-up compass is mounted to the glare shield.

Panel Layout – Standard / Moving Map Portrait

1 – Water temperature indication
2 – Engine RPM
3 – Rotor RPM
4 – Oil pressure
5 – Fuel level indicator
6 – Cylinder head temperature
7 – Oil temperature
8 – Magnetic compass
9 – Warning lights
10 – Lateral trim indicator
11 – Manifold pressure gauge (if installed)
12 – Air speed indicator
13 – Attitude Indicator (if installed)
14 – Altimeter
15 – Cut-out 57mm / 2 ¼” for optional inst.
16 – Basic Flight Instrument (if installed)
17 – Vertical Speed Indicator (if installed)
18 – VPP control and end position detection IVO propeller (if installed)
19 – Cooling fan manual activation
20 – RBT indicator
21 – ATC transponder (if installed)
22 – Collision Avoidance System (if inst.)
23 – Radio (if installed)
24 – MAG switches
25 – Pneumatic mode selector
26 – 12V power receptacle (if installed)
27 – Master/starter switch
28 – Trim/brake pressure gauge
29 – Audio in (if installed)
30 – OAT indicator
31 – Pre-rotator overdrive/override
32 – Hour meter
33 – Circuit Breaker Panel
34 – Switches

Panel Layout – Day VFR with Ipad

1 – Hour meter
2 – Circuit Breaker Panel
3 – Air outlet
4 – Switches (2nd fuel pump, lights, optns.)
5 – Pre-rotator overdrive/override
6 – OAT indicator
7 – Radio (if installed)
8 – Cut-out 57mm / 2 ¼" for optional inst.
9 – Trim/brake pressure gauge
10 – Master/starter switch
11 – MAG switches
12 – 12V power receptacle (if installed)
13 – Pneumatic mode selector
14 – ATC transponder (if installed)
15 – RBT indicator
16 – Cooling fan manual activation
17 – Fuel level indicator
18 – Cylinder head temperature
19 – Oil pressure
20 – Oil temperature
21 – Engine RPM
22 – Rotor RPM
23 – Lateral trim indicator
24 – Warning and Caution Panel
25 – Manifold pressure gauge (if inst.)
26 – Air speed indicator
27 – Attitude Indicator or VSI (if installed)
28 – Altimeter
29 – Water temp (if fitted).
30 – Not assigned
31 – Not assigned
32 – Ipad (if fitted)

A digital electronic altimeter and air-speed indicator manufactured by Auto-Gyro are available as alternative fitments to the conventional barometric devices. These electronic instruments are configurable for different units (e.g. knots, mph, km/hr) and have coloured limitations markings applicable to the aircraft type. If fitted a User Manual is provided.

These may be fitted to any day VFR panel (not night and day VFR)

Panel Layout – Day and Night VFR

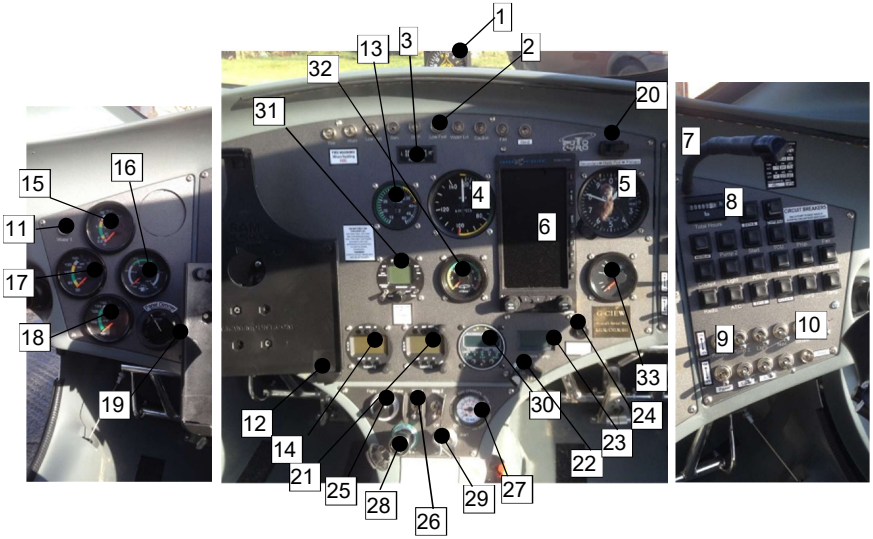

1 – Magnetic compass
2 – Warning lights
3 – Lateral trim indicator
4 – Air speed indicator
5 – Altimeter
6 – Aspen PFD
7 – Hour meter
8 – Circuit Breaker Panel
9 – Switches (avionic and 2nd fuel pump)
10 – Switches (options)
11 – Water temperature indication
12 – Cooling fan manual activation
13 – Manifold press gauge
14 – ATC transponder (if installed)
15 – Oil pressure gauge
16 – Fuel pressure gauge
17 – Oil temp gauge
18 – CHT or coolant temp gauge
19 – Panel light dimmer
20 – Static port switch
21 – Radio (if installed)
22 – Audio in (if installed)
23 – OAT indicator
24 – Overdrive/rotor brake interlock releas
25 – Pneumatic mode selector
26 – MAG switches
27 – Trim/brake pressure gauge
28 – 12V power receptacle
29 – Master/starter switch
30 – Clock
31 – Propeller controller.
32 – Rotor rpm gauge
33 – Fuel level gauge

Panel Layout – Glass Cockpit - Single Display

1 – Water temperature indication
2 – Magnetic compass
3 – Warning lights
4 – Lateral trim indicator
5 – Air speed indicator
6 – Altimeter
7 – Cut-out 57mm / 2 ¼” for optional inst.
8 – Vertical Speed Indicator (if installed)
9 – Cooling fan manual activation
10 – RBT indicator (options)
11 – ATC transponder (if installed)
12 – Collision Avoidance System (if inst.)
13 – Radio (if installed)
14 – Pneumatic mode selector
15 – MAG switches
16 – Trim/brake pressure gauge
17 – 12V power receptacle (if installed)
18 – Master/starter switch
19 – Audio in (if installed)
20 – Pre-rotator overdrive/override
21 – Glass Cockpit
22 – Hour meter
23 – Circuit Breaker Panel
24 – Switches

Panel Layout – Glass Cockpit - Dual Display

1 – Water temperature indication
2 – Magnetic compass
3 – Warning lights
4 – Lateral trim indicator
5 – Air speed indicator
6 – Altimeter
7a – Glass Cockpit Display I
7b – Glass Cockpit Display II
8 – Cooling fan manual activation
9 – ATC transponder (if installed)
10 – Collision Avoidance System (if inst.)
11 – Radio (if installed)
12 – MAG switches
13 – Pneumatic mode selector
14 – 12V power receptacle (if installed)
15 – Master/starter switch
16 – Trim/brake pressure gauge
17 – Audio in (if installed) OAT indicator
18 – Pre-rotator overdrive/override
19 – Hour meter
20 – Circuit Breaker Panel
21 – Switches

Panel Layout – Glass Cockpit – Garmin G3X

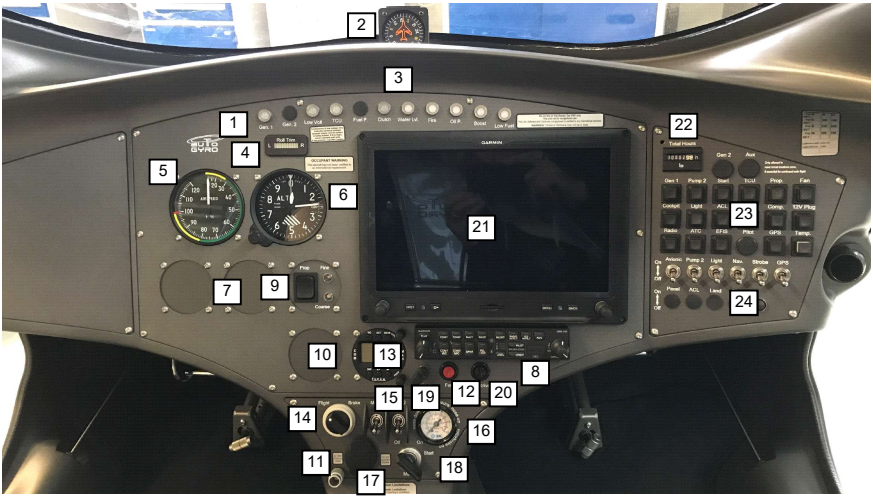

1 – Water temperature indication
2 – Magnetic compass
3 – Warning lights
4 – Lateral trim indicator
5 – Air speed indicator
6 – Altimeter
7 – Cut-out 57mm / 2 ¼” for optional inst.
8 – Garmin comms panel
9 – VP Prop control
10 – Alternative transponder location
11 – Vent knob
12 – Fan
13 – Radio (if installed)
14 – Pneumatic mode selector
15 – MAG switches
16 – Trim/brake pressure gauge
17 – 12V power receptacle (if installed)
18 – Master/starter switch
19 – Audio in (if installed)
20 – Pre-rotator overdrive/override
21 – Garmin G3X Glass Cockpit
22 – Hour meter
23 – Circuit Breaker Panel
24 – Switches

Note that the Garmin transponder is built in.

Garmin equipment note.
1. When starting the panel, the radio is turned ON with the Garmin Comms panel OFF. After radio boot-up, then turn the Garmin comms ON.
2. The transponder interface is via the Garmin G3X panel. The transponder device is located under the left seat.
Read the operation manuals!

7.16 Cabin Fresh Air

Where fitted (body series II), fresh air can be routed into the cabin through an air intake in the fuselage nose of the gyroplane as necessary (depending on date of manufacture). Intensity of the fresh air inflow depends on the effective air flow to the fuselage. Cabin fresh air inflow is controlled by the cabin fresh air shutter, which is operated via the knurled knob in the centre console of the cockpit.

Knurled Knob	Cabin Fresh Air Shutter
Pulled	Open / Inflow of cabin fresh air
Pushed	Closed / No cabin fresh air inflow

7.17 Intercom

The standard intercom system features standard headset sockets (TSR Tip Ring Sleeve) with additional XLR-3 socket for active headset power supply. Sockets are provided at the aft console between the crew seats. The intercom amplifier and VOX control is integrated in the radio.

In case of ATR 833, an audio in socket is provided in the instrument panel right beside the radio. Audio sources can be connected to the intercom system using a standard 3.5 mm audio jack.

See manufacturer's manual for additional information.

7.18 Pitot Static

Total pressure is picked up by a pitot tube located in the nose section of the fuselage. The tube is connected to the integrated cockpit instruments by a plastic line. The static pressure is measured across two ports, one on either side of the fuselage. For aircraft equipped for Night-VFR an alternate static port is provided by an open vent behind the instrument panel and selection of primary/alternate static source made by a toggle switch on the instrument panel.

Aircraft equipped for Night-VFR also have a heated pitot-tube.

7.19 Indicators and Sensors

Rotor speed is measured by a magnetic pick-up, located directly at the geared ring of the rotor head.

If Rotorhead II is embodied then an additional indicator “Clutch” is provided. Comparison of rotor RPM with engine RPM governs the CLUTCH indication that informs the pilot about a slipping clutch (continuous light) or warns of an attempted take-off run with the risk of blade flapping (blinking).

- CLUTCH is on with engine speeds above 2200 RPM and rotor speed not matching while pre-rotator is depressed (slipping clutch)
- CLUTCH is blinking with engine speeds above 5000 RPM and rotor speed below 200 RPM (attempted take-off run with the risk of blade flapping)

NOTE

If the stick is pulled back more than 5degrees the pre rotator clutch will automatically disengage. In this case the CLUTCH lamp will indicate a continuous light until the pre rotator button is released.

Rotor bearing temperature is measured by a temperature sensor which is glued into the rotor bearing sleeve. This is deleted when rotorhead III is installed.

Other indicators and sensors have been described in the respective paragraphs. For engine related indicators and sensors see the engine manufacturer’s manual.

7.20 Seats and Seatbelts

The seats consist of seating surface as an integral part of the monocoque structure and adjustable backrest, upholstered with removable cushions. The cushions consist of a foam core covered with an easily cleanable, water-repellent fabric.

The backrest hinges are positioned by 2 countersunk Allen bolts on two seating rails. To suit to different leg lengths the backrest hinges can be adjusted by removing the Allen bolts and refitting in a different position on the rails. Ensure the screws are properly tightened after adjustment! In addition the backrest angle can be adjusted by modifying the lengths of the telescopic tubes..

An adjustable four point harness is provided for each seat. Make sure that the seat belt is buckled and tight when flying with the left hand seat unoccupied.

7.21 Stowage Capacity

A storage compartment is located behind each seat with a maximum capacity of 10 kg each.

7.22 Fire-warning system

The Cavalon gyroplane may be equipped with a Fire indicator light to alert the pilot that a certain temperature in the engine compartment (or rear compartment) has been exceeded, possibly as a result of a fire. The fire indication circuit is based on a special cable routed inside the compartment(s). The cable has two integrated wires separated by an insulation layer. At a defined temperature the insulation layer will melt and the embedded wires close contact.

A possible fire (circuit closed with low resistance) will be indicated by a flashing/blinking Fire indicator light in the Warning and Caution Panel. During normal operation (circuit closed with 'normal' resistance) the Fire indicator light will be off. A malfunction of the system (circuit open or shorted to ground) is indicated by a constantly lit Fire indication. At every power-on event the system will perform a lamp test consisting of a series of three flashes.

Indicator Light	System Status
OFF	Normal Operation (normal resistance)
FLASHING	Fire, abnormal temperature (circuit closed)
ON	System Malfunction (circuit open or shorted to ground)

In the event of a fire indication being shown proceed according to emergency procedure "Smoke and Fire" provided in SECTION 3

CONTENTS

INTENTIONALLY LEFT BLANK

SECTION 8 - HANDLING AND SERVICING

This chapter contains guidelines for correct handling and servicing of the gyroplane, as well as manufacturer recommendations helping to keep its performance, reliability and value.

8.1 Maintenance Obligations

The owner/operator is responsible to ensure that the aircraft is kept in an airworthy condition. With respect to continued airworthiness, manufacturer requirements and regulations from your competent aviation administration (for example annual airworthiness inspection) need to be complied with.

All airworthiness limitations, inspections and time limits are described in detail in the Aircraft Maintenance Manual. However, for owner/operator's information the intervals for mandatory maintenance events are provided as follows:

- 25 hrs: "25 hrs inspection" (one-time / non-recurrent)
- 100 hrs / 12 months (whatever occurs first): "100 hrs inspection"
- 12 months/ Annual airworthiness review (if or as required by a relevant organisation)

For engine maintenance and overhaul, refer to the engine manufacturer's manual.

Special inspections have to be performed by an authorized and qualified maintenance centre or the manufacturer after operational incidents, which are

- Suspected hard landing
- Rotor contact with obstacle
- Propeller contact with obstacle or external impact
- Bird strike
- Lightning strike

If any of the above cases apply, mark the aircraft as 'unserviceable' and consult the manufacturer or an authorized maintenance and repair station before further operation.

Apart from these obligatory inspections and maintenance tasks, the owner/operator is entitled to perform the following preventive and in-between maintenance tasks and checks, as well as exchange of parts and minor repairs:

8.2 General

Whenever possible, park the gyroplane in a place where it is protected from direct sunlight, wind and humidity. High humidity, especially in combination with a salt-laden atmosphere will lead to corrosion and/or composite structure paint blisters. The sunlight's ultra-violet radiation and the heat impact on the GRP/CRP components may lead to a degradation of the materials integrity. The manufacturer will take no responsibility for damage or impaired safety margin due to improper treatment.

8.3 Ground Handling

Experience shows that aircraft may be exposed to much higher loads when operated on ground, than when in flight.

Take care not to impose high loads caused by excessive and fast taxying on rough terrain, or hard bouncing of the aircraft over the hangar thresholds etc.

Use caution when handling the gyroplane on ground. Do not push hard at the rudder or at the outer stabilizers. Avoid excessive swing of the rotor blades as repeated bending ultimately leads to fatigue or damage.

8.4 Cleaning

Care and regular cleaning of engine, propeller, rotor system and fuselage is the basic foundation for airworthiness and reliability. Therefore, the gyroplane should be cleaned after every last flight of the day or more often, if environmental conditions dictate.

In order to protect the gyroplane against dirt, dust, bird soil, and sunlight, the aircraft should be covered with the Autogyro covers or a light plastic tarpaulin or cloth (use a clean, lint free, cloth for the canopy). Openings to the engine, service access port and airspeed indicator should be closed after the flight (to limit access for insects, birds etc.).

Contamination can be cleaned with clean water, possibly with mild cleaning additives. To clean the rotor it is best to soak contamination with a cloth or towel, wipe with soft or micro-fibre cloth, and rinse thoroughly with water.

A clean canopy aids safe flying. Clean with fresh water for removal of grit etc, without rubbing the grit into the canopy surface. Then use proper plexiglass cleaning sprays such as Plexus with soft lint free cloths to polish and finish the surface inside and out. Read and follow the product instructions.

A good quality polish helps protect the surface finish and reduce surface friction.

Use of RainX or other proprietary rain repellent compound will help rain drops wash away when flying in rain. Read the instructions, and ensure the compound is suitable for use on Plexiglass. It is recommended to check that it does not affect the canopy by applying to a small rearwards area first and checking for any negative reaction.

CAUTION

Do not use gasoline or solvents as cleaning agents for the windshields, as it will destroy them irreparably. Do not let windshields sun-dry after washing as they will stain permanently.

8.5 Refuelling

Have aircraft electrically grounded before refuelling by attaching the earth (ground) lead to the engine exhaust pipe. Be aware that most airfield refuelling equipment is laid out for larger diameter tank filler necks and high flow rates. To avoid contamination, use a funnel with strainer and/or filter when refuelling from canisters. In order to top-off both tanks allow flow levels to balance-out.

Fuel level is checked using the dip stick which has to be inserted diagonally from the fuel filler port. Note that the upper end of the stick shows 3 narrow rings as markings. Remove dip stick from tank and read level. Markings are available per 10 litres. Wipe and return dip stick to its holder.

Fuel and Engine Coolant Dip Stick

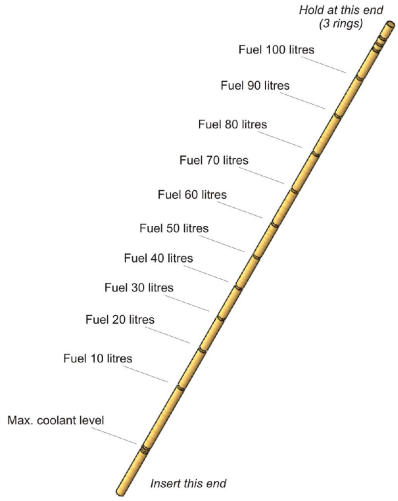

NOTE

Do not fill to the absolute maximum in order to allow for thermal expansion of the fuel. Fill only to a gap of around 10mm under the filler cap neck.

8.6 Checking of Engine Oil Level

Before attempting to check the engine oil level double check that both magnetos are switched off. The oil level is measured with the aircraft in a level attitude and should be between the marks on the dipstick.

Open oil tank access cover, remove oil reservoir cap and dipstick. Turn the engine by the propeller in the correct sense of rotation until you clearly hear the oil gurgle in the tank over several rotations.

Insert cleaned dipstick for measurement. Fill up oil according to the engine manufacturer's specification when required. After completion make sure the dip stick is in place and the reservoir cap is back on securely. Install access cover.

CAUTION

Never attempt to turn the engine against its sense of rotation as this may lead to expensive hydraulic tappet damage.

8.7 Checking of Engine Coolant Level

Between flights, the engine coolant level is checked by verifying the level in the overflow bottle. Insert Fuel and Engine Coolant Dip Stick. Coolant level must be visible. Replenish as necessary. The maximum coolant level is marked by 2 narrow rings on the Dip Stick.

Before the first flight of the day check coolant level in expansion tank and replenish to maximum. For additional details concerning this pre-flight check and a description of the more comprehensive daily check procedure, refer to the engine manufacturer's manual.

8.8 Tyre Pressure

Main wheels .....1.8 – 2.2 bar
(if operating at 560kg take-off weight increase to 2.3 bar)
Nose wheel .....2.0 – 2.4 bar
(2.2 -2.3bar if operating at 560Kg take off weight)

Tyres fitted with green valve caps have been filled with nitrogen.

The mainwheels are fitted with tyre size 400/100-2Ply (with inner tube) or the heavier duty Sava 4.00-8C B13 71J 6PR TT tyres for operation at 560Kg MTOW.

The nose wheel is fitted with tyre size 400-4, or the heavier duty Tost Aero 400-8 (especially for 560Kg MTOW operation).

If flying in the winter with a frozen-over or snow covered runway, it is advisable to remove the wheel spats in order to avoid their damage and snow build up inside them. It is the pilot's responsibility to ensure that in the rear part of the spat no snow has built up, which could lead to freezing against the wheels and stopping them from turning. Always use loctite 243 on wheel spat centre bolt,

CAUTION

Operation of the aircraft on very slippery surfaces requires great care – the aircraft may slide sideways during pre-rotation, take off, or in ordinary ground handling, resulting in high potential for an accident. Use care!

8.9 Lubrication and Greasing

Between maintenance intervals the owner/operator is entitled to do the following lubrication and greasing:

Component	Interval	Application	Type
Teeter hinge	5 hrs (recommended)	as required	88-00-00-S-30477 or equivalent
Pre-rotator drive coupling sleeves	as required	as required	88-00-00-S-30476

Caution

Rotor vibration is often caused by looseness of the teeter bolt in the rotor or teeter tower bushes, in turn caused by insufficient greasing of the rotor grease nipple. Regular greasing reduces wear.

CAUTION

While lubricating teeter hinge (especially with new bush bearings and related close gap dimensions) it may be possible that only very small amounts of lubricant pass through the grease nipples on the rotor. In this case, do not press too hard but better remove the bolt, lubricate the outside and re-install. Use a new split pin!

8.10 Replenishing of Fluids

8.10.1 Engine oil

See engine manufacturer's manual.

8.10.2 Engine coolant

See engine manufacturer's manual. Engine cowling must be removed!

8.11 Engine Air Filter

The air intake filters need to be replaced or cleaned according to the manufacturer's recommendation. Depending on environmental conditions, such as dust, sand, or pollution the recommended rate of maintenance should be increased as required. The engine cowling must be removed!

8.12 Propeller

Clean regularly as contamination will noticeably decrease its efficiency, resulting in a negative effect on both aircraft performance and noise emission. Use either pure water or add mild cleaning additives. Let contamination soak, then remove with a soft cloth or micro fibre material and rinse thoroughly with water. Check for erosion and damage, especially at the leading edge and blade tips. Check tight fit at the propeller blade root or any unusual sound when tapping the blades, especially in the case of a variable pitch propeller. If in doubt or if damage is obvious, consult the aircraft manufacturer or a qualified maintenance station. Minor chips may be repaired. Consult the AMM for detail.

8.13 Battery

The aircraft is fitted with a maintenance-free gel electrolyte or, where approved, lithium ion battery. Maintenance is therefore limited to outside soundness, correct attachment, and cleaning. Check integrity of the battery as leaking fluid contains corrosive sulphuric acid which could lead to extensive damage when contacting the framework and attachments.

Charge the battery only with a charging device which is suitable for the battery type fitted.

CAUTION

The battery must never be deep discharged, as it will be damaged. If so, it might need to be replaced.

8.14 Winter Operation

The cooling system for the cylinder heads of the engine is filled with a mixture of anti-freeze and water, which gives freezing protection down to -20 °C. Check the protection temperature of the coolant and add anti-freeze as required.

If temperatures are expected to fall below protection temperature, drain the coolant, and if required for service, refill with pure antifreeze. As anti-freeze ages, renew the coolant every two years. Read the engine manual for the manufacturer's recommendations.

CAUTION

Pure antifreeze is not as good an engine coolant as a 50/50 mix with water. Take care that engine coolant limits are not exceeded. As soon as ambient temperatures permit, drain and refill with the normal coolant mix.

During winter operations the necessary operating temperature for oil and cooling agent may not be reached. This can be compensated by taping some portion of the coolers. Monitor all engine temperatures closely after having the coolers taped and modify as required.

Before each flight inspect all control cables for free and easy movement and sufficient lubrication.

8.15 Removal, Disassembly, Assembly and Installation of the Rotor

In order to transport or park the gyroplane with minimum space requirements, the rotor system can be removed and disassembled, if needed. In order to do so, a second person is needed to assist and help to prevent any damage to the gyroplane or the rotor system.

WARNING

The rotor system must be removed and disassembled for road transport. When handled incorrectly the rotor system can be damaged irreparably. If undetected this may have catastrophic consequences.

CAUTION

When removing or disassembling make sure to mark all parts so that each and every component of the rotor system is reassembled and installed in exactly the same way and orientation. Some rotor blades have loose washers in them which are required as balance weights. Do not remove or restrain if present!

8.15.1 Removal of the Rotor System

1. Secure the gyroplane on level ground by engaging the parking brake, adjust the rotor system to park 30deg from fore-aft, and pressurize the rotor brake up to maximum. Secure a step ladder to the right side of the aircraft..
2. Remove and discard split pin and unscrew the castellated nut (5). The rotor system has to be tilted onto the black rotor teeter stop.
3. The teeter bolt (1) has to be extracted by using only the hand, not a hammer. If needed tilt the rotor blades carefully onto the teeter stop, in order to prevent the bolt from jamming. Make sure that the rotor stays level in the teeter axis, if not the teeter bolt will damage the Teflon coated bushes, while being pushed out.
4. A supervised second person is required to support the front looking rotor blade.
5. Lift the rotor system carefully out of the teeter tower and be aware of the position of the shim washers (2). Their thicknesses may differ and it is essential that they are reinstalled on the correct side! They are marked with dots to identify the correct side.
6. Remove the rotor system to one side by letting it rest on your shoulder and take care not to collide with stabilizer or propeller.
7. The shim washers and the teeter block in the hub are marked on each side with one or two engraved dots. Directly after the disassembly the shim washers need to be fixed on their respective side with cable ties, so to prevent loss.
8. The rotor system must not be placed on a dirty or grainy surface, as the blades can scratch and damage easily. The best way is to place the rotor blades centrally onto two stands, supporting the rotor at approximately 2 m distance from the hub.

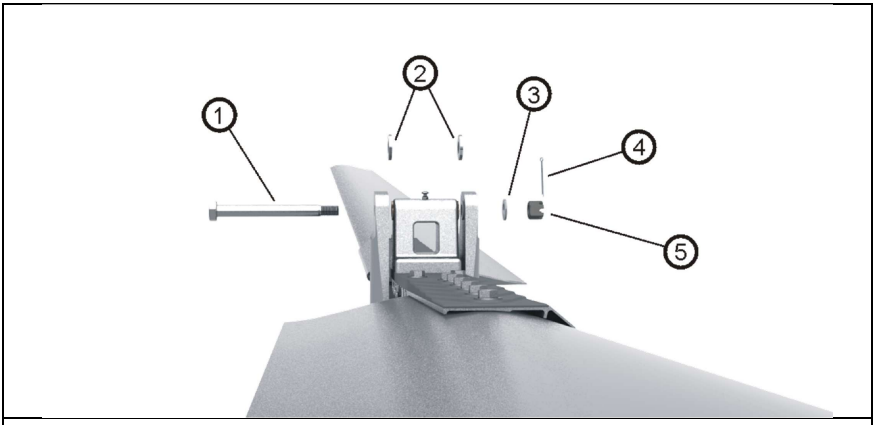

1 – Teeter bolt	4 – Split pin
2 – Shim washers (2 ea.)	5 – Castellated nut
3 – Outer washer	

Handling of the Rotor System

Do not lift or support the rotor system at its blade tips as the bending moment caused by the weight of the hub assembly may overstress the blade roots. If possible, handle with two persons while holding approximately in the middle of each blade. When supporting the system use two stands each positioned in about 2 metres distance from the hub.

CAUTION

The assembled rotor system can be damaged irreparably if handled incorrectly. If the rotor system is lifted in a wrong way, its own weight may overstrain the material.

8.15.2 Disassembly of the Rotor System

1. To disassemble the rotor system, place it upside down onto a clean surface or stands to support the rotor at approximately 2 m from the hub (so that the system is at the design coning angle of 2.4deg per side).
2. Loosen locknuts (6) on the first blade by counter holding the corresponding bolt head to prevent it from turning inside the blade holes.
3. Push out all fitting bolts (4) without any force, but use no more than a gentle tapping if necessary. Tilt the rotor blade up and down to support easy removal of the bolt. Note that fitting bolts have different shaft lengths.
4. Carefully pull the rotor blade out of the hub (1) in radial direction and take off the clamping profile (2).
5. Repeat step 2 to 4 on second rotor blade.
6. **Do not disassemble the rotor hub!**
7. Store and transport rotor blades, clamping profile and rotor hub only in air cushion foil or using other suitable means to prevent bending or surface damage.

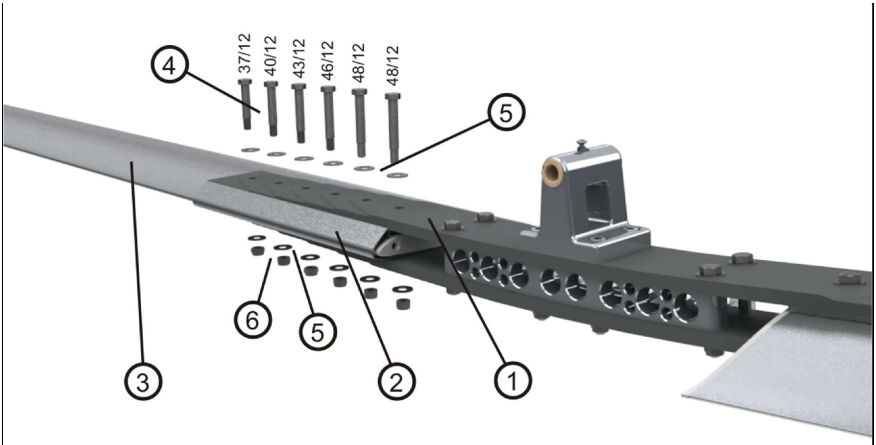

1 – Rotor hub	4 – Fitting bolts (as depicted)
2 – Clamping profile	5 – Washer (12 ea.)
3 – Rotor blade	6 – Lock nuts (6 ea.)

8.15.3 Assembly of the Rotor System

1. The rotor blades, clamping profile and rotor hub are labelled with an engraved serial number.
2. Insert the first rotor blade carefully into the clamping profile. Make sure that all serial numbers match.
3. Fit the rotor hub side with the according serial number to clamping profile and blade. Insert fitting bolts without using force so that the bolt end is on top when the rotor system is installed. For re-identification and correct installation position the shaft length is provided in the figure above. Example: 40/12 means shaft length 40mm.
4. Position the washers and the locknut and hand-tighten all nuts.
5. Torque-tighten nuts with 15 Nm from the inside to the outside, using a torque wrench. When doing so, counter-hold bolts to prevent any damage the hub and blade holes.
6. Repeat steps 2 to 5 for the second rotor blade.

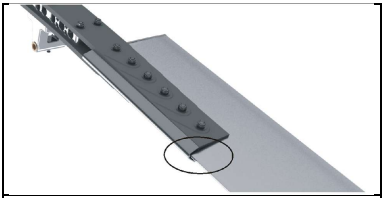

Position where serial numbers are engraved (bottom side)

8.15.4 Installation of the Rotor System

CAUTION

During installation make sure to have each and every part of the rotor system installed in exactly the same way and orientation as it was before.

1. Secure the gyroplane on level ground by engaging parking brake, adjust the rotor head or teeter tower corresponding to 30deg from fore-aft and pressurize the rotor brake up to maximum.
2. Check correct matching of parts: The rotor hub and the teeter tower are marked with two dots according to the orientation for installation.
3. Lift the rotor blade with a second briefed person standing at the forward end of the rotor.
4. Approach with the rotor system from the side to the gyroplane and make sure not to collide with propeller or stabilizer. The person fitting the rotor to the aircraft has the hub bar on his shoulder, and climbs the ladder with the rotor across the aircraft. The rotor is then lifted over the teeter tower and lowered into place.
5. The second person can let go, as soon as it is resting centrally in the teeter tower on the teeter stops.
6. Insert teeter bolt by hand in the same orientation as it was before (bolt head should be at that side of the teeter block which is marked with one dot) while matching the shim washers with the corresponding installation positions.
7. Check direction of assembly and shim washers: rotor hub, teeter tower and shim washers are marked on each side either with one or two engraved dots.
8. If the teeter bolt cannot be inserted, tilt the rotor blade along the teeter axis with the free hand.
9. Install washer and castellated nut. Hand-tighten only, 1-2Nm and secure with a new split pin. Use split pins only once. Make sure that the teeter bolt can be turned easily by hand.
10. Check that the rotor teeters freely to the teeter stops, and grease the hub block grease nipple. Turn the rotor fore/aft and fit tie down bag to secure the rotor.

8.16 Road Transport

If road transport cannot be avoided, transport with minimum fuel, which reduces airframe loads and prevents fuel spilling through vent pipes.

Switch ELT (if installed) off for road transport to avoid false alarms!

Tie-down the fuselage using the following procedure:

- Restrain main wheels (blocks/chocks)
- Put a wooden block below the lowest point of the keel tube and lash keel tube against wooden block. The block should be dimensioned so that the main wheels are half way unloaded
- Lash down both main wheels through the lashing lugs (use rims/axles alternatively)
- Lash down nose wheel through the axle
- For container transport or shipping, use the mast tie-down kit (option)

Furthermore, it is recommended to protect the gyroplane against external elements. The rotor blades must be packed carefully, as even the smallest damages may force the replacement of the complete system.

WARNING

The rotor system must be removed and disassembled for road transport. When handled incorrectly the rotor system can be damaged irreparably. If undetected this may have catastrophic consequences.

CAUTION

When wrapping make sure that the foil or stretch wrap does not directly cover painted surfaces. Put a soft layer in between for damage protection and let plastic components breathe. Do not expose wrapped gyroplane or parts to sun radiation or heat in order to avoid paint damage.

8.17 Repairs

IMPORTANT NOTE

Repairs may only be executed by Authorised Persons, and in strict compliance with the AMM and any issued repair instructions.

INTENTIONALLY LEFT BLANK

SECTION 9 - SUPPLEMENTS

LIST OF SUPPLEMENTS

INTENTIONALLY LEFT BLANK

9-1 Variable Pitch Propeller - IVO

9-1.1 General

A variable pitch propeller (VPP) manufactured by IVO is available as optional equipment to optimize the propeller efficiency, fuel consumption, and noise in all flight regimes and power settings. This is achieved by changing the propeller pitch.

9-1.2 Limitations

No change to standard aircraft

9-1.3 Emergency Procedures

Proceed according to generic variable pitch propeller procedure provided in SECTION 3 for the standard aircraft.

9-1.4 Normal Procedures

9-1.4.1 Set Propeller to FINE

In order to set the propeller to FINE for start-up, take-off and approach, use the following procedure:

- Press rocker in direction FINE (forward or top position), status indicator FINE flashes, engine RPM increases
- Keep rocker depressed until end position is reached (status indicator FINE steady on)

9-1.4.2 Adjust Propeller COARSE

- Adjust propeller pitch and throttle to match engine RPM and manifold pressure according to the power setting table (9-1.5)

CAUTION

When adjusting the propeller do not overtorque (i.e. too high MAP for given RPM) the engine as this may lead to overloading, reduced life time or possible damage.

NOTE

As a safety measure, the mechanical end stop in full COARSE position is chosen to allow a residual climb rate of 1 m/s in standard atmospheric conditions at sea level with maximum allowed gross mass.

9-1.4.3 Functional Check VPP

NOTE

Functional check of the variable pitch propeller must be executed during run-up (see 4.7)

Engine RPM: 4000 – Adjust variable pitch propeller in direction 'COARSE' until engine RPM decreases significantly. Afterwards adjust back into 'FINE' end position (status indicator FINE steady on), RPM must increase again up to 4000.

CAUTION

Respect power plant limitations and instrument markings (see 2.6) during functional check – monitor MAP gauge!

9-1.5 Performance

ROTAX 912 ULS

Power setting	Engine RPM	MAP	Fuel flow [ltr/h]
Max. TOP	5800	27.5	27
Max. MCP	5500	27	26
75% MCP	5000	26	20
65% MCP	4800	26	18
55% MCP	4300	24	14

ROTAX 914 UL

Power setting	Engine RPM	MAP	Fuel flow [ltr/h]
Max. TOP	5800	39	33
Max. MCP	5500	35	26
75% MCP	5000	31	20
65% MCP	4800	29	17.5
55% MCP	4300	28	12.5

MAP limits do not apply at engine speeds above 5100 RPM, marked by a yellow triangle at the RPM gauge / engine speed indicator.

NOTE

Above data is valid for standard conditions at sea level. Keep in mind that engine and propeller performance is affected by altitude and temperature. For detailed information refer to the engine manufacturer's and propeller manufacturer's documentation.

9-1.6 Weight and Balance

No change to standard aircraft

9-1.7 System Description

The IVO variable pitch propeller is controlled by a spring-loaded rocker switch labelled FINE and COARSE. Propeller pitch adjustment is controlled by an electronic circuit which provides system status indication using two status indicators (orange LED). Status indication logic and corresponding system status is described in the following table:

Status Indicators (orange)	System Status Propeller Pitch Control
Both LEDs off	No pitch chance
Upper LED flashing	Propeller changing pitch to FINE
Upper LED steady on*	End position FINE reached and electronic pitch change inhibit FINE activated. LED goes out after 3 seconds (beginning with version 1.2)
Lower LED flashing	Propeller changing pitch to COARSE
Lower LED steady on*	End position COARSE reached and electronic pitch change inhibit COARSE activated LED goes out after 3 seconds (beginning with version 1.2)
Both LEDs flashing fast synchronously**	Actuating motor does not work despite rocker switch activation. Possible defects: brushes worn out, cable break, motor defect …
Both LEDs flashing fast asynchronously**	An error occurred at least three times. Operation is not affected (beginning with version 1.3)

To preserve the rubber stops motor drives in opposite direction for a short time when end positions are reached (back drive). The system knows the end positions already when starting the gyroplane (beginning with version 1.1).

**) Indication can only be reset by switching the master switch temporarily to OFF and then back ON. In order to avoid pilot distraction, indication of a possible defect is re-triggered after another activation of the rocker switch.

Activation of the rocker switch closes an electrical circuit which energizes the electrical pitch control motor inside the propeller hub through brushes running on a collector ring. The electrical motor drives a mechanical gear which is connected to torsion tubes running inside the propeller blades. Actual blade feathering motion is achieved by twisting the complete blade, without having the need for a pitch change bearing.

9-1.8 Handling and Servicing

Refer to the manufacturer's documentation.

9-2 Lights

9-2.1 General

Depending on customer's configuration the gyroplane can be equipped with optional

- Landing lights
- Navigation /position lights
- Strobe lights

9-2.2 Limitations

No change to standard aircraft

9-2.3 Emergency Procedures

No change to standard aircraft

9-2.4 Normal Procedures

The lights can be switched on or off by respective switches in the right hand instrument panel, labelled

- "Light" for landing light
- "Nav" for navigation/position lights
- "Strobe" for strobe lights
- 'Land' for the under-body landing light

Due to their small silhouette gyroplanes are easily overlooked, especially if approached directly from behind, such as on approach. It is therefore highly recommended that navigation and strobe lights are switched on during flight.

9-2.5 Performance

No change to standard aircraft

9-2.6 Weight and Balance

No change to standard aircraft

9-2.7 System Description

Navigation and strobe lights are installed as combined units at the left hand and right hand side of the fuselage, behind the passenger station. Landing lights are located on the left and right hand side in the nose section.

For night VFR, the aircraft is equipped with certified navigation and strobe lamps mounted on stalks either side of the aircraft. These stalks position the lights in the exact positions for regulatory compliance.

Red anti-collision beacons mounted on the wheel spats are available as an option.

An underbody bright landing light (large LED cluster lamp) is fitted .

Instrument panel lighting is also provided, with a dimmer switch, map light, and interior light

9-2.8 Handling and Servicing

No change to standard aircraft

9-3 GPS/Moving Map Systems

9-3.1 General

Depending on customer's configuration the gyroplane can be equipped with different GPS/Moving Map Systems as optional equipment.

NOTE

Any moving map system is to be used for reference only and does not replace proper flight planning and constant oversight and awareness.

9-3.2 through 9-3.6

No change to standard aircraft.

9-3.7 System Description

Refer to the manufacturer's documentation.

9-3.8 Handling and Servicing

Refer to the manufacturer's documentation.

INTENTIONALLY LEFT BLANK

9-4 Fire Indication

9-4.1 General

Depending on customer's configuration the gyroplane can be equipped with a Fire indicator light to alert the pilot that a certain temperature in the engine compartment has been exceeded (the engine is on fire). The fire indication circuit consists of a cable routed inside the engine compartment. The cable has two integrated wires separated by an insulation layer. At a defined temperature the insulation layer will melt and the embedded wires close contact.

Engine fire (circuit short-closed, low resistance) will be indicated by a flashing/blinking Fire indicator light in the Warning and Caution Panel. During normal operation (circuit closed, 'normal' resistance) the Fire indicator light will be off. A malfunction of the system (circuit open) is indicated by a constantly lit Fire indication. At power-on the system will perform a lamp test consisting of a series of three flashes.

Indicator Light	System Status
OFF	Normal Operation (normal resistance)
FLASHING	Fire, abnormal temperature (circuit short-closed)
ON	System Malfunction (circuit open)

9-4.2 Limitations

No change to standard aircraft.

9-4.3 Emergency Procedures

Proceed according to emergency procedure "Smoke and Fire" provided in SECTION 3 for the standard aircraft.

9-4.4 through 9-4.9

No change to standard aircraft

INTENTIONALLY LEFT BLANK

9-5 Air Conditioning System

9-5.1 General

Depending on customer's configuration the gyroplane can be equipped with an air conditioning system (option) instead of the cabin heating system (option). The air conditioning system uses the same cockpit control as the cabin heating system. In this case the cabin air control lever is colour coded with a blue mark.

9-5.2 Limitations

No change to standard aircraft.

9-5.3 Emergency Procedures

It is recommended to have the air conditioning system switched OFF in case of the following events or conditions:

- Air restart (see 3.2)
- Degradation of engine power (see 3.4)

9-5.4 Normal Procedures

In order to switch the air conditioning system on move the cabin air control lever from its off position forward. Cooling effect is increased by moving the lever further to the front. Switch off air conditioning by pulling the control fully back until blower fan stops.

The air conditioning system is designed to circulate cabin air. In order to achieve maximum cooling effect, have cabin windows closed and control lever in most forward position. Note that the air conditioning system will automatically disengage at engine RPM below 2500.

9-5.5 Performance

With a normal running engine the degradation in performance will not be noticeable.

Consider fuel flow increase of about 2%.

9-5.6 Weight and Balance

The effect on weight and balance is considered in the weighing report

9-5.7 System Description

The air conditioning system consists of the following components

- Condenser with blower fan, installed in the nose section
- Electrically driven compressor (forward cabin floor)
- Evaporator with blower and ducting, installed at cabin rear wall
- Hoses for cooling agent, including pressure switch and receiver/drier
- Electrical control box, installed at the rear wall (behind the fire wall)
- Engine driven alternator/generator
- Cockpit control 'Cabin Air'

The ‘Cabin Air’ control switches the air conditioning system on or off by operating a micro switch. Cooling intensity is regulated by varying the flow of the cooling agent, respectively the speed of the cabin blower fan.

In order to allow sufficient air flow for the condenser the nose section is modified to have one ram air inlet and gills at both sides to let condenser air escape. The evaporator blower fan sucks cabin air through the ducting and blows cooled air through the cabin outlet.

The air conditioning system is operated by a self-contained 24V electrical system, consisting of engine driven alternator/generator, regulator and battery. A low-voltage protection will disengage the air conditioning system automatically at engine speeds below about 2500 RPM.

Ducting with cabin air outlets
(evaporator behind)

Air intake and gills for condenser

Electrically driven compressor

Engine driven alternator/generator

9-5.8 Handling and Servicing

No maintenance required. In case of reduced cooling effect or malfunction refer to the Manufacturer Maintenance Manual.

9-6 ELT (Emergency Locator Transmitter)

9-6.1 General

Depending on customer's configuration or legal requirements the gyroplane can be equipped with an ELT (Emergency Locator Transmitter) as an option. The ELT sends distress signals on 406 MHz and 121.5 MHz in case of a crash or can be activated manually by means of a remote cockpit switch or at the ELT's front panel. These distress signals are received and processed by COSPAS-SARSAT satellite-based search and rescue (SAR) system and by airborne and ground stations. The system is designed to remain permanently attached to the aircraft.

9-6.2 Limitations

No change to standard aircraft.

9-6.3 Emergency Procedures

In case of the following events, manually activate the ELT by switching the remote cockpit switch to 'ON':

- Expected crash landing
- Forced landing in hostile terrain (high vegetation, trees, rugged ground)
- Ditching in hostile water (sea state, temperature, off-shore)

Consider to squawk '7700', if transponder is installed and to make an emergency call.

When on ground, inform ATC, any nearby tower or any station via 121.5 MHz (or frequency appropriate to the airspace that the aircraft is operated within) or mobile phone about the emergency, if still possible.

9-6.4 Normal Procedures

During normal operation, the front panel switch of the ELT transmitter must be in 'ARM' position in order to allow automatic activation (g-sensor). In addition, the ELT can be activated by switching the remote cockpit switch to 'ON'. The red visual indicator will be on.

During road transport, shipment, when the aircraft is parked for a longer period or for maintenance operation, the front panel switch of the ELT should be switched to 'OFF' in order to avoid false alarms.

In case of accidental activation, the ELT can be reset either by switching to 'RESET/TEST' on the Remote Control Panel or switching to 'OFF' on the ELT transmitter.

9-6.5 through 9-6.6

No change to standard aircraft

9-6.7 System Description

The ELT installation consists of the following components

- ELT transmitter with visual indicator and mounting bracket
- ELT antenna
- Remote cockpit switch with visual indicator

The ELT transmitter is installed below the left hand seat and can be accessed through the service cover below the seat cushion. The ELT transmitter is connected to the ELT antenna at the rear part of the rotor mast fairing. A remote cockpit switch with visual indicator is provided in the instrument panel. In order to use the remote cockpit switch or to enable automatic activation, the 3-position toggle switch of the transmitter must be set to 'ARM'.

If ELT is inadvertently activated, use the 'RESET/TEST' position of the rocker switch to stop transmission and reset the unit. The red visual indicator will extinguish when unit is reset.

The ELT system sends distress signals on 406 MHz and 121.5 MHz. The 406 MHz transmission carries digital data which enable the identification of the aircraft in distress and facilitate SAR operation (type of the aircraft, number of passengers, type of emergency). The 406 MHz message is transmitted to the COSPAS-SARSAT satellites and is downloaded to one of the 64 ground stations. The aircraft is located by Doppler effect by the LEO satellites with a precision better than 2 NM (4 km) at any point of the earth.

The 121.5 MHz frequency is no more processed by COSPAS-SARSAT system but is still used by SAR services for homing in the final stage of rescue operations.

In the event of a crash, the ELT activates automatically by means of a g-switch and transmits a sweep tone on 121.5 MHz and the 406 MHz signal.

For further information, please refer to the manufacturer's documentation. Note that apart from the initial registration process, recurrent registration may apply depending on market requirements. It is the aircraft operators responsibility to ensure compliance!.

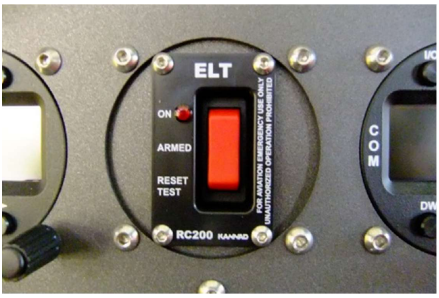

Remote cockpit switch

ELT transmitter and cockpit switch

9-6.8 Handling and Servicing

The ELT transmitter contains a battery with a limited lifetime. See placard and accompanying documentation. For maintenance and testing, please contact your qualified service partner.

9-7 Removal/Installation of Doors

9-7.1 General

If a flight with doors removed is desired or necessary, the following procedure for removal and installation must be followed. Removed doors must be stored preferably free from humidity and dust. In order to remove or install a door, a second briefed person is needed to assist and help to prevent any damage to the gyroplane or the door.

Door removal is a permissible pilot activity.

NOTE

For flights with doors removed respect 4.22.

Removal/Installation of a door:

1. Open door
2. Holding the door, pull gas spring off the ball joint on fuselage
3. Lower the door, pull quick pins out of the door hinges and remove door
4. Store door at an adequate location dry and clean
5. Remove ALL loose articles from the cabin, including dirt that could get blown around and over the occupants.
6. If door seal is pressed over the frame edge and not secured by a safety wire (depending on date of manufacture), remove door seal
7. Installation of a door: Removal procedure in reverse order

View of the two door hinges. Note direction of bolt fitment.

Series 1 body doors may be retained by bolts instead of pins. In this case,

1. Remove gas strut from door to be removed by popping the ends from the nipple on the door and on the aircraft body.
2. Close the door and loosely lock.

3. Noting the location and quantity of washers, remove the nut and hinge bolt from both hinges. Alternatively, remove the 4 bungs on the inside of the cabin, and remove the 4 nuts that hold the hinge eye bolts in place with a socket drive.
4. Disengage the door lock, and lift the door away from the aircraft – and put it onto a suitable protected surface.
5. Remove ALL loose articles from the cabin, including dirt that could get blown around and over the occupants.
6. If door seal is pressed over the frame edge and not secured by a safety wire (depending on date of manufacture), remove door seal
7. Note the door removal in the aircraft logbook.

Installation of a door: Removal procedure in reverse order

9-7.2 Limitations

See 4.21

9-7.3 Emergency Procedures

No change to standard aircraft

9-7.4 Normal Procedures

No change to standard aircraft

9-7.5 Performance

In section 5 described flight performances can be affected negatively due to flying with doors removed.

9-7.6 Weight and Balance

No change to standard aircraft

9-7.7 System Description

No change to standard aircraft

9-7.8 Handling and Servicing

No change to standard aircraft

9-8 Instructor Throttle Lever

9-8.1 General

Depending on customer's configuration the gyroplane can be equipped with optional flight instructor throttle lever. The instructor throttle lever allows an ergonomic left-handed throttle control from the passenger seat (left hand).

9-8.2 through 9-8.6

No change to standard aircraft

9-8.7 System Description

9-8.8 Handling and Servicing

No change to standard aircraft

INTENTIONALLY LEFT BLANK

9-9 Alternative Rotor System 8.6 m

9-9.1 General

Depending on customer's configuration the gyroplane can be equipped with an alternative, larger rotor system (rotor diameter 8.6 m) instead of the standard rotor system. This is especially designed for aeronautical operation with high take-off mass, in high altitudes or high temperatures ("hot and high").

9-9.2 Limitations

9-9.3 Emergency Procedures

No change to standard aircraft

9-9.4 Normal Procedures

No change to standard aircraft

9.9.5 Performance

No change to standard aircraft

9-9.6 Weight and Balance

No change to standard aircraft

9-9.7 System Description

General

Type: .....2-bladed, fixed pitch, free to teeter
Material: ..... EN AW 6005A T6 aluminium extrusion
Blade profile: .....NACA 8H12
Blade tip colour: ..... Grey

Alternative Rotor

Rotor diameter ..... 8.6 m
Rotor disc area .....58,1 sqm

9-9.8 Handling and Servicing

NOTE

Rotor tie-down bag to secure the rotor system for parking must be equipped with an adequate long rope so that the rotor system can be secured stress-free.

INTENTIONALLY LEFT BLANK

9-10 Mobility Equipment

9-10.1 General

Flight controls (rudder and nose wheel) of the Cavalon with installed Mobility Equipment can be controlled without use of legs. The Mobility Equipment also provides an electrical powered adjustment of pilot´s back rest and a flight control horn which is able to swing down to support embarking and disembarking of the aircraft.

9-10.2 through 9-10.3

No change to standard aircraft

9-10.4 Normal Procedures

9-10.4.1 Daily or Pre-flight Checks

Station 8 (cabin, RH side)
Control horn quick release pins.....Secure and tight fit

9-10.5 through 9-11.6

No change to standard aircraft

9-10.7 System Description

9-10.7.1 Flight Control Horn

The flight control horn is designed to control rolling and pitching conventionally; additionally it replaces the use of pedals for yawing. Operation of the control horn, and control horn movements, are shown in the following figure.

Left and right hand control horn heads are identical; however only the right hand control horn´s head buttons are connected for operation. The control horn heads are ergonomically shaped to fit both pilot's hands (right and left hand) and feature control buttons for radio transmission (1), a four-way trim function (2), and activation of the pre-rotator (3).

Control horn head

1 – Radio transmission
2 – Trim switch
3 – Pre-rotator

The control horn may be swung down to simplify embarking and disembarking. To swing down pull out the two quick release pins from the horn root and pull the horn to the top axially until the horn is able to swing down. Lay horn down into the leg room. Make sure push-pull control cables are not bent! For mounting the control horn, execute swing-down procedure in reverse order.

WARNING

Ensure correct installation of the flight control horn; ensure secure and tight fit of the quick release pins.

The pedals in the right hand leg room are still connected to the pedals in the left hand leg room and to the rudder. This allows control of the aircraft by conventional flight control procedures (foot pedals = rudder), from the left seat. In the right hand footwell, the pedal sliding block is mounted on an adapter plate which positions the pedal unit further forward, increasing leg room in comparison with the standard configuration.

WARNING

Foot pedals in the right hand leg room must never be obstructed or blocked.

9.10.7.2 Backrest Adjustment

The backrest of the pilot seat is electrically adjustable. To adjust the backrest, operate the right hand button of the seat heating, which is connected to the backrest actuator.

9.10.8 Handling and Servicing

No change to standard aircraft

CONTENTS

INTENTIONALLY LEFT BLANK

SECTION 10 - SAFETY TIPS

General

This section provides miscellaneous suggestions and guidance to help the pilot operate the gyroplane more safely.

Low-G Avoidance

Never push the control stick forward to descend or to terminate a pull-up (as you would in an airplane). This may produce a low-G (near weightless) condition which can result in a situation with reduced or lost lateral roll control and significant loss of main rotor RPM. Always reduce power to initiate a descent.

Side Slip in Gyroplanes

Excessive side slip has to be avoided at all means. Side slip can be safely performed up to the degree which is necessary for proper runway alignment for landing within crosswind limitations. Excessive side slip starts at a point where de-stabilizing effects of the fuselage balance out or even supersede the stabilizing effects of the stabilizer. Pilots being new to gyroplanes, especially those with fixed wing experience may not be aware of these physical limitations. When exceeding these limitations, be it by imitating ‘professionals’ or applying habits and control schemes from fixed wing aircraft, the gyroplane may enter an attitude where it is not recoverable any more. As the pedal control is rather sensitive and alignment is crucial in high-performing gyroplanes, pilots should develop a feeling for side slip and ‘automatized feet’ in order to maintain aerodynamic alignment and to compensate for power-induced yaw couplings by anticipation as a conditioned reflex.

A note to training facilities and flight instructors: Due to their reduced directional stability, gyroplanes require active control to enter, stabilize and neutralize side slip. Most students perceive natural discomfort in side slip. Depending on the situation, students may erroneously make a wrong control input or freeze, especially when over-challenged, stressed, or surprised by the situation. In our opinion flight training should focus on the necessity of correct alignment, the training of recovery procedures, and the development of the right reflexes. Intentional side slip training as a normal procedure is considered to be critical as there is no instrument to indicate ‘safe’ boundaries. An experienced pilot may tell from an imminent change in control response when limits are approached. A student, however, may unknowingly or inadvertently overshoot the limits, especially when he is overly focussed on the touch-down zone and coming in too high.

Side slip may be performed as a part of the emergency training only, and within safe boundaries. The student must be briefed

- to use gentle pedal input for initiation and stabilization
- initiate side slip at or below 90 km/h and maintain air speed by using his perception of speed, respectively speed sensation (for want of a working air speed indication)
- not to rely on airspeed indication in side slip
- never to perform abrupt control stick input into the direction of motion (to chase a faulty speed indication)

It is highly advisable that the instructor remains light on the controls at all times.

Flying Low on Fuel Is Dangerous

Never intentionally allow the fuel level to become critically low. Although a gyroplane leaves much more options than a fixed wing aircraft and is easier to control during power-off than a helicopter, a forced landing into unknown terrain always poses unnecessary and unpredictable risk with danger to material, health, or life.

Do Not Push the Envelope and Remain Easy On the Controls

Avoid abrupt control inputs or accelerated manoeuvres, particularly at high speed. These produce high fatigue loads in the dynamic components and could cause a premature and catastrophic failure of a critical component.

Strobe Lights On – For Your Own and Other's Safety

Turn the strobe lights (if installed) on before starting the engine and leave it on until the rotor stops turning. The strobe lights are located near the propeller and provide a warning to ground personnel. Leaving them on in flight is also advisable since the gyroplane may be difficult for other aircraft to see.

Propellers and Rotors Can Be Extremely Dangerous

Never attempt to start the engine until the area around the propeller is completely clear of any persons or objects. Do not start the engine while standing beside the aircraft as you will easily be struck by the propeller in case of a brake failure or an operating error.

Be sure ground personnel or onlookers don't walk into the propeller or main rotor. Mind the spinning rotor and propeller when taxiing close to obstructions or persons. It is advisable to maintain at least one rotor diameter distance from obstructions or persons when taxiing with spinning rotor. A fast turning rotor is almost invisible, but may contain enough energy to kill a person.

Never let go of the control stick and make sure the rotor blades spin down in level/horizontal attitude until the rotor is at a complete stop. Wind or negligent behaviour on the control stick may cause the blades to flap dangerously low and hit control stops, stabilizer, or people.

Power Lines and Cables Are Deadly

Flying into wires, cables, and other objects is by far the number one cause of fatal accidents in rotary wing aircraft. Pilots must constantly be on the alert for this very real hazard.

- Watch for the towers; you will not see the wires in time
- Fly directly over the towers when crossing power lines
- Allow for the smaller, usually invisible, grounding wire(s) which are well above the larger more visible wires
- Constantly scan the higher terrain on either side of your flight path for towers
- Always maintain at least 500 feet AGL except during take-off and landing. By always flying above 500 feet AGL

Loss of Visibility Can Be Fatal

Flying a gyroplane in obscured visibility due to fog, snow, low ceiling, or even a dark night can be fatal. Gyroplanes have less inherent stability and much faster roll and pitch rates than airplanes. Loss of the pilot's outside visual references, even for a moment, can result in

disorientation, wrong control inputs, and an uncontrolled crash. This type of situation is likely to occur when a pilot attempts to fly through a partially obscured area and realizes too late that he is losing visibility. He loses control of the gyroplane when he attempts a turn to regain visibility but is unable to complete the turn without visual references.

You must take corrective action before visibility is lost! Remember, a precautionary landing in a gyroplane will always be safer than a flight with impaired or no visibility.

Overconfidence Prevails in Accidents

A personal trait most often found in pilots having serious accidents is overconfidence. High-time fixed-wing pilots converting to gyroplanes and private owners are particularly susceptible. Airplane pilots feel confident and relaxed in the air, but have not yet developed the control feel, coordination, and sensitivity demanded by a gyroplane. Private owners must depend on self-discipline, which is sometimes forgotten. When flown properly and conservatively, gyroplanes are potentially the safest aircraft built. But especially gyroplanes also allow little tolerance when flown to their limits. Gyroplanes must always be flown defensively.

Flying Low over Water is Very Hazardous

Accidents repeatedly occur while manoeuvring low over water. Many pilots do not realize their loss of depth perception when flying over water. Flying over calm glassy water is particularly dangerous, but even choppy water, with its constantly varying surface, interferes with normal depth perception and may cause a pilot to misjudge his height above the water.

MAINTAIN SAFETY ALTITUDE At ALL TIMES

Conversion Pilots Constitute High Risk When Flying Gyroplanes

There have been a number of fatal accidents involving experienced pilots who have many hours in airplanes or helicopters but with only limited experience flying gyroplanes.

The ingrained reactions and habits of an experienced airplane pilot can be deadly when flying a gyroplane. The airplane pilot may fly the gyroplane well when doing normal manoeuvres under ordinary conditions when there is time to think about the proper control response. But when required to react suddenly under unexpected circumstances, he may revert to his airplane reactions and commit a fatal error. Under those conditions, his hands and feet move purely by reaction without conscious thought. Those reactions may well be based on his greater experience, i.e., the reactions developed flying airplanes.

For example, in an airplane his reaction to an engine failure would be to immediately and considerably go forward with the stick or horn. In a gyroplane, application of inadequate forward stick could result in a low-G situation or, if the engine failure occurred during initial climb, a reduction of rotor RPM combined with a high sink rate with the consequence of a hard landing or impact.

Airplane pilots may also underestimate pedal work. Especially in a gyroplane, pedal control is most critical as it has the highest rate response with the smallest static and dynamic damping effect of all other controls. On top of that, power-yaw coupling is much more predominant than in an airplane. Being used to the high directional stability of an airplane, a conversion pilot may neglect proper pedal work and, which is much worse, assume side slip limits at the pedal stop. Very much like helicopters, gyroplanes cannot be flown by control

position or control force, but solely by resulting attitude. That means that the pilot together with his built-in senses and programmed reflexes represents a vital part in the active control feedback loop.

Helicopter pilots, on the other hand, may underestimate the characteristics of gyroplanes and the necessity for proper training. The simplicity of design may lead them to the assumption that gyroplanes are easy to fly throughout the envelope. Even helicopter pilots that do not 'look down' on gyroplanes and take it serious may confuse throttle control (push for power) with the control sense of a collective pitch (pull for power) in a stress situation.

To develop safe gyroplane reactions, conversion pilots must practice each procedure over and over again with a competent instructor until hands and feet will always make the right move without requiring conscious thought. AND, ABOVE ALL, HE MUST NEVER ABRUPTLY PUSH THE CONTROL STICK FORWARD.

Beware of Demonstration or Initial Training Flights

A disproportionate number of fatal and non-fatal accidents occur during demonstration or Initial training flights. The accidents occur because individuals other than the pilot are allowed to manipulate the controls without being properly prepared or indoctrinated.

If a student begins to lose control of the aircraft, an experienced flight instructor can easily regain control provided the student does not make any large or abrupt control movements. If, however, the student becomes momentarily confused and makes a sudden large control input in the wrong direction, even the most experienced instructor may not be able to recover control. Instructors are usually prepared to handle the situation where the student loses control and does nothing, but they are seldom prepared for the student who loses control and does the wrong thing.

Before allowing someone to touch the controls of the aircraft, they must be thoroughly indoctrinated concerning the sensitivity of the controls in a gyroplane. They must be firmly instructed to never make a large or sudden movement with the controls. And, the pilot-in-command must be prepared to instantly grip the controls should the student start to make a wrong move.

Training Off-Field Simulated Engine Failures

Pilots: Besides legal aspects, never train off-field simulated engine failures on your own!

Instructors: Always check an area for wires or other obstructions before simulating engine failures. Consider go-around path and the suitability for an actual engine off touch-down. Cut the throttle smoothly and keep control of engine idle RPM to avoid actual engine starvation.

APPENDIX

LIST OF APPENDICES

Operator Registration Form
Customer Feedback Form
Incident Reporting Form

INTENTIONALLY LEFT BLANK

Use this form to register as (new) operator / owner, in order to receive safety and service related information concerning your aircraft. The information is stored in a database and is only used within AutoGyro GmbH for the above purpose.

Without proper and timely registration, the operator will not receive vital information, which may lead to unsafe flight or an un-airworthy aircraft.

Return this form to:
AutoGyro GmbH
Dornierstraße 14
31137 Hildesheim or E-Mail to info@auto-gyro.com

Aircraft Type:	Serial Number (Werk-Nr.):	Registered at: (Airworthiness authority)
Registration / Call Sign: curr./new: previous:	Year of manufacture:	Engine Type:
Airframe S/N:	Rotor System S/N:	Engine S/N:
Airframe hours:	Rotor System hours:	Engine hours:

Previous Owner (if applicable) - please state name, full address, phone and E-Mail

Signature and Date

New/current Owner - please state name, full address, phone and E-Mail

E-Mail Signature and Date

Below fields are used for AutoGyro internal processing – do not fill in!

Data entered onto database (by / when)	Acknowledgement sent (date) (by / when)	

Use this form to register as (new) operator / owner, in order to receive safety and service related information concerning your aircraft. The information is stored in a database and is only used within AutoGyro GmbH for the above purpose.

Without proper and timely registration, the operator will not receive vital information, which may lead to unsafe flight or an un-airworthy aircraft.

Return this form to:
AutoGyro GmbH
Dornierstraße 14
31137 Hildesheim or E-Mail to info@auto-gyro.com

Aircraft Type:	Serial Number (Werk-Nr.):	Registered at: (Airworthiness authority)
Registration / Call Sign: curr./new: previous:	Year of manufacture:	Engine Type:
Airframe S/N:	Rotor System S/N:	Engine S/N:
Airframe hours:	Rotor System hours:	Engine hours:

Previous Owner (if applicable) - please state name, full address, phone and E-Mail

Signature and Date

New/current Owner - please state name, full address, phone and E-Mail

E-Mail

Signature and Date

Below fields are used for AutoGyro internal processing – do not fill in!

Data entered onto database (by / when)	Acknowledgement sent (date) (by / when)	

This form is supplied to enable the owner/operator to inform (anonymously, if needed) AutoGyro GmbH of any incident, accident, or other field or service failure that they feel appropriate. The owner must also, of course, inform the relevant authorities if that is appropriate, e.g. Air Accident Investigation Branch etc.

Depending on the incident information supplied, a corrective action is investigated and, if needed, supplied back to the customer(s).

The information is stored in a database and is only used within AutoGyro GmbH for the above purpose.

Return this form to:
AutoGyro GmbH
Dornierstraße 14
31137 Hildesheim or E-Mail to info@auto-gyro.com

Aircraft Type:	Serial Number (Werk-Nr.):	Registered at: (Airworthiness authority)
Registration / Call Sign:	Year of manufacture:	Engine Type:
Airframe S/N:	Rotor System S/N:	Engine S/N:
Airframe hours:	Rotor System hours:	Engine hours:

Description of incident (be as precise as possible and use extra sheets if needed)

Incident reported by (information is only stored for further inquiry and deleted after investigation)

E-Mail Signature and Date

Below fields are used for AutoGyro internal processing – do not fill in!

Investigation completed	Corrective action	Internal reference

www.auto-gyro.com

AutoGyro GmbH
Dornierstrasse 14
31137 Hildesheim
Germany

Phone +49 (0) 5121 / 880 56–00
info@auto-gyro.com
www.auto-gyro.com